TECHNICAL REPORT

ISO TR 10064-2

First edition
1996-03-01

Cylindrical gears — Code of inspection practice —

Part 2:
Inspection related to radial composite deviations, runout, tooth thickness and backlash

Engrenages cylindriques — Code pratique de réception —
Partie 2: Contrôle relatif aux écarts composés radiaux, au faux-rond, à l'épaisseur de dent et au jeu entre dents

Reference number
ISO/TR 10064-2:1996(E)

CONTENTS

FOREWORD iv

1 Scope 1

2 References 1

3 Symbols, corresponding terms and definitions 2
3.1 Lower case symbols 2
3.2 Upper case symbols 2
3.3 Greek symbols 2
3.4 Subscript symbols 2
3.5 Definitions 3

4 Measurement of radial composite deviations 6
4.1 Checking principle 6
4.2 The utility of radial composite deviation data 7

5 Measurement of runout, determining eccentricity 8
5.1 Measuring principle 8
5.2 Anvil size for measuring runout 9
5.3 Measuring runout 9
5.4 Evaluation of measurement 11
5.5 Value of runout measurement 11
5.6 The relation between runout and pitch deviations 11

6 Measurement of tooth thickness, tooth span and dimension over balls or cylinders 14
6.1 Tooth thickness measurement 14
6.2 Span measurement 15
6.3 Control of tooth thickness by determining the dimension over balls or cylinders 17
6.4 Tooth thickness measurement with radial composite measurement 19
6.5 Calculations for radial composite action test measurement 19

7 Gear limits and fits 21
7.1 Introduction 21
7.2 Tooth thickness tolerances 22

Annex A Backlash and Tooth Thickness Tolerance 23
A.1 Purpose 23
A.2 Backlash 23
A.3 Maximum Tooth Thickness 23
A.4 Minimum Backlash 23
A.5 Specifications For Tooth Thickness Measurement 24
A.6 Maximum Backlash 24

Annex B Bibliography 26

© ISO 1996

All rights reserved. Unless otherwise specified, no part of this publication may be reproduced or utilized in any form or by any means, electronic or mechanical, including photocopying and microfilm, without permission in writing from the publisher.

International Organization for Standardization
Case Postale 56 • CH-1211 Genève 20 • Switzerland

Printed in Switzerland

TABLES

Table 1 - Standard pin diameters in mm 17
Table A1 - Recommended values minimum backlash $j_{bn\,min}$ for coarse pitch gears 24

FIGURES

Figure 1 - Span and tooth thickness allowances 4
Figure 2 - Tooth thickness, transverse plane 5
Figure 3 - Relationship between circumferential j_{wt}, normal j_{bn}, and radial j_r backlash 6
Figure 4 - Principle of measuring radial composite deviations 7
Figure 5 - Radial composite deviation diagram 7
Figure 6 - Interpretation of radial composite deviation 8
Figure 7 - Principle of measuring runout 9
Figure 8 - Anvil size for measuring runout 10
Figure 9 - Runout from coordinate measuring machine 10
Figure 10 - Runout diagram of a gear with 16 teeth 11
Figure 11 - Runout and pitch deviations of an eccentric gear 12
Figure 12 - Gear with zero runout, but with considerable pitch and cumulative pitch deviations (all space widths are equal) 12
Figure 13 - Gear with pitch and cumulative pitch deviations and zero runout 13
Figure 14 - Actual gear with little runout and substantial cumulative pitch deviation 13
Figure 15 - Runout measurement with a rider when all space widths are equal and pitch deviations are present 14
Figure 16 - Addendum and chordal tooth thickness 14
Figure 17 - Chordal tooth thickness measurement by gear tooth caliper 15
Figure 18 - Span measurement of helical gears 15
Figure 19 - Limits of span measurement in base tangent plane 16
Figure 20 - Dimension M_d over (between) balls or cylinders for spur gear teeth 17
Figure 21 - Ball size 18
Figure 22 - Radical composite action test measurement of tooth thickness 20
Figure 23 - Fit of gear teeth 21

Figure A1 - Feeler gauge backlash measurement (normal plane) 23

FOREWORD

ISO (the International Organization for Standardization) is a worldwide federation of national standards bodies (ISO member bodies). The work of preparing International Standards is normally carried out through ISO technical committees. Each member body interested in a subject for which a technical committee has been established has the right to be represented on that committee. International organizations, governmental and non-governmental, in liaison with ISO, also take part in the work. ISO collaborates closely with the International Electrotechnical Commission (IEC) on all matters of electrotechnical standardization.

The main task of technical committees is to prepare International Standards, but in exceptional circumstances a technical committee may propose the publication of a Technical Report of one of the following types:

— type 1, when the required support cannot be obtained for the publication of an International Standard, despite repeated efforts;

— type 2, when the subject is still under technical development or where for any other reason there is the future but not immediate possibility of an agreement on an International Standard;

— type 3, when a technical committee has collected data of a different kind from that which is normally published as an International Standard ("state of the art", for example).

Technical Reports of types 1 and 2 are subject to review within three years of publication, to decide whether they can be transformed into International Standards. Technical Reports of type 3 do not necessarily have to be reviewed until the data they provide are considered to be no longer valid or useful.

ISO/TR 10064-2, which is a Technical Report of type 3, was prepared by Technical Committee ISO/TC 60, *Gears*.

Together with definitions and values allowed for gear element deviations, the International Standard ISO 1328:1975 also provided advice on appropriate inspection methods.

In the course of revising ISO 1328:1975, it was agreed that the description and advice on gear inspection methods should be brought up to date. Because of necessary enlargement and other considerations, the Technical Committee decided that the relevant sections should be published under separate cover as a Technical Report, type 3. It was decided that, together with this Technical Report, a system of documents as listed in clause 2 (References) and annex B (Bibliography) should be established for definitive information.

ISO/TR 10064 consists of the following parts, under the general title *Cylindrical gears — Code of inspection practice*:

— *Part 1: Inspection of corresponding blanks of gear teeth*

— *Part 2: Inspection related to radial composite deviations, runout, tooth thickness and backlash*

— *Part 3: Recommendations relative to blanks, shaft centre distance and parallelism of axes*

— *Part 4: Recommendations relative to surface roughness and tooth contact pattern checking*

Cylindrical gears — Code of inspection practice —

Part 2:
Inspection related to radial composite deviations, runout, tooth thickness and backlash

1 Scope

This part of the Technical Report constitutes a code of practice dealing with inspection relevant to radial composite deviations, runout, tooth thickness and backlash of cylindrical involute gears; i.e., with measurements referred to double flank contact.

In providing advice on gear checking methods and the analysis of measurement results, it supplements the standard ISO 1328-2. Most of the terms used are defined in ISO 1328-2.

Annex A provides a method to select gear tooth thickness tolerances and minimum backlash of a gear mesh. Suggested values for minimum backlash are included.

2 References

ISO 53: 1974	Cylindrical gears for general and heavy engineering - Basic rack;
ISO 54: 1977	Cylindrical gears - Modules and diametral pitches of cylindrical gears for general and heavy engineering;
ISO 1328-1:1995	Cylindrical gears - Definitions and allowable values of deviations relevant to corresponding flanks of gear teeth;
ISO 1328-2:	Cylindrical gears - Definitions and allowable values of deviations relevant to radial composite deviations and runout information *(in the state of preparation)*;
ISO/TR 10064-1: 1992	Cylindrical gears - Code of inspection practice - Inspection of corresponding flanks of gear teeth;
ISO/TR 10064-3:	Cylindrical gears - Recommendations relative to blanks, shaft center distance and parallelism of axes *(in the state of preparation)*.

3 Symbols, corresponding terms and definitions

3.1 Lower case symbols

a	center distance	mm
b	facewidth	mm
d	reference diameter	mm
d_b	base diameter	mm
d_a	tip diameter	mm
f_e	eccentricity	mm
f_i''	tooth-to-tooth radial composite deviation	µm
h_a	addendum	mm
h_c	reference chordal height	mm
m_n	normal module	-
s_n	normal tooth thickness	mm
s_{nc}	normal chordal tooth thickness	mm
x	profile shift coefficient	-
z	number of teeth	-

3.2 Upper case symbols

D_M	diameter of ball or cylinder used for measurement	mm
E_{sni}	lower tooth thickness allowance	mm
E_{sns}	upper tooth thickness allowance	mm
F_i''	total radial composite deviation	µm
F_r	runout	µm
F_r''	runout by composite test	µm
M_d	dimension over balls or cylinders (pins)	mm
W_k	base tangent length	mm

3.3 Greek symbols

α_{Mt}	pressure angle in transverse plane	°
α_n	normal pressure angle	°
β	helix angle	°
δ	prism (anvil) half angle	°
ε_β	overlap ratio	-
η	tooth space half angle	°
ψ	tooth thickness half angle	°

3.4 Subscript symbols

0	tool	b	base
1	pinion	t	transverse
2	wheel (gear)	w	working
3	master gear	y	any (specified) diameter

3.5 Definitions

3.5.1 Definitions with regard to composite deviation

The **reference axis** of a component is defined by means of datum surfaces. In most cases the axis of the bore can be adequately represented by the axis of the mating work arbor (see ISO/TR 10064-3).

The **geometric axis of the teeth** for radial composite deviation is that axis which, if used for the measurement, would give the minimum root mean square (rms) total composite deviation over a complete revolution.

3.5.2 Definitions with regard to tooth thickness

Nominal tooth thickness, s_n, on the reference cylinder in a normal plane is equal to the theoretical value for meshing without backlash with a mating gear, which also has the theoretical tooth thickness, on the basic center distance. The nominal tooth thickness is calculated using the following equations:
for external gears,

$$s_n = m_n \left(\frac{\pi}{2} + 2 \tan \alpha_n x \right) \qquad \text{...(1)}$$

for internal gears,

$$s_n = m_n \left(\frac{\pi}{2} - 2 \tan \alpha_n x \right) \qquad \text{...(2)}$$

For helical gears, the value of s_n is measured in the normal plane.

Maximum and minimum limits of tooth thickness, s_{ns} and s_{ni}, are the two extreme permissible sizes of tooth thickness between which the actual size should lie, the limits of size being included. See figure 1.

The upper and lower (E_{sns} and E_{sni}) **tooth thickness allowances** define the limits of gear tooth thickness. See equations 3 and 4 and figure 1.

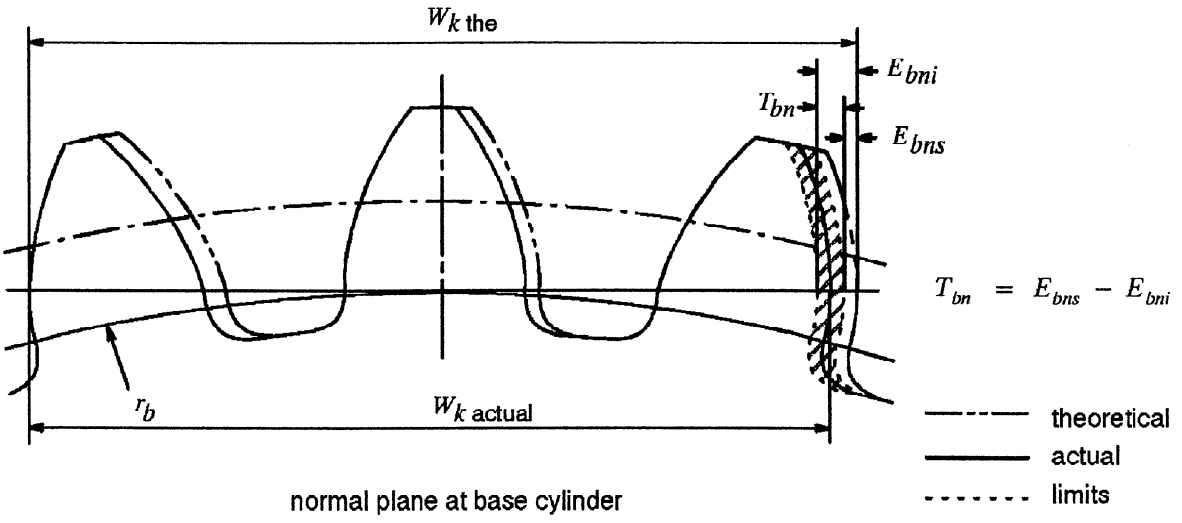

normal plane at base cylinder

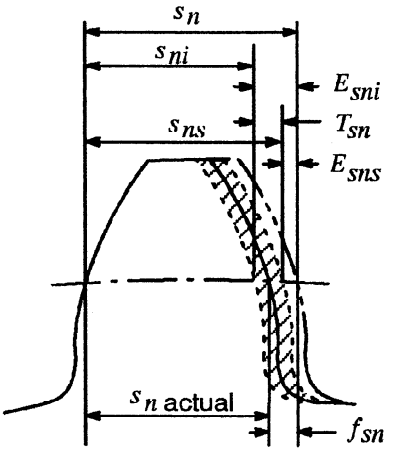

plane normal to the tooth profile at reference cylinder

s_n	is nominal tooth thickness
s_{ni}	is minimum limit of tooth thickness
s_{ns}	is maximum limit of tooth thickness
s_n actual	is actual tooth thickness
E_{sni}	is lower tooth thickness allowance
E_{sns}	is upper tooth thickness allowance
f_{sn}	is tooth thickness deviation
T_{sn}	is tooth thickness tolerance
	$T_{sn} = E_{sns} - E_{sni}$

Figure 1 - Span and tooth thickness allowances

$$E_{sns} = s_{ns} - s_n \quad \text{...(3)}$$

$$E_{sni} = s_{ni} - s_n \quad \text{...(4)}$$

Tooth thickness tolerance, T_{sn}, is the difference between the upper and the lower tooth thickness allowance.

$$T_{sn} = E_{sns} - E_{sni} \quad \text{...(5)}$$

The design values of tooth thickness are usually established from engineering considerations of gear geometry, gear tooth strength, mounting and considerations of backlash. The methods for establishing design tooth thicknesses for given applications are beyond the scope of this document.

Actual tooth thickness, $s_{n\ \text{actual}}$, is the tooth thickness determined by measurement.

Functional tooth thickness, s_{func}, is the maximum tooth thickness value obtained on a radial composite action test (double flank) by means of a calibrated master gear.

It is a measurement which encompasses the effects of element deviations in profile, helix, pitch, etc., similar to the concept of maximum material condition, see 6.5. It should never exceed the design tooth thickness.

The **Effective tooth thickness** of a gear will be different than the measured tooth thickness by an amount equal to all the combined effects of the tooth element deviations and mounting, similar to functional tooth thickness.

It is the final envelope condition which encompasses all the effects which must be considered to determine the maximum material condition.

The tooth element deviations of mating gears may have an additive effect or may cancel each other at various angular positions within a given mesh. It is not possible to segregate the individual tooth element deviations from the effective tooth thickness.

3.5.3 Definitions with regard to backlash

Backlash is the clearance between the non-working flanks of two mating gears when their working flanks are in contact, as shown in figure 2.

Note: Figure 2 is drawn at the position of tightest center distance; if center distance is increased backlash will increase. The maximum effective tooth thickness (minimum backlash) will be different than the measured tooth thickness by an amount equal to all the combined effects of the tooth element deviations, and mounting, similar to functional tooth thickness. It is the final envelope condition which encompasses all the effects which must be considered to determine the maximum material condition.

Usually the backlash under stabilized working conditions (working backlash) is different from (smaller than) the backlash which is measured when the gears are mounted in the housing under static conditions (assembly backlash).

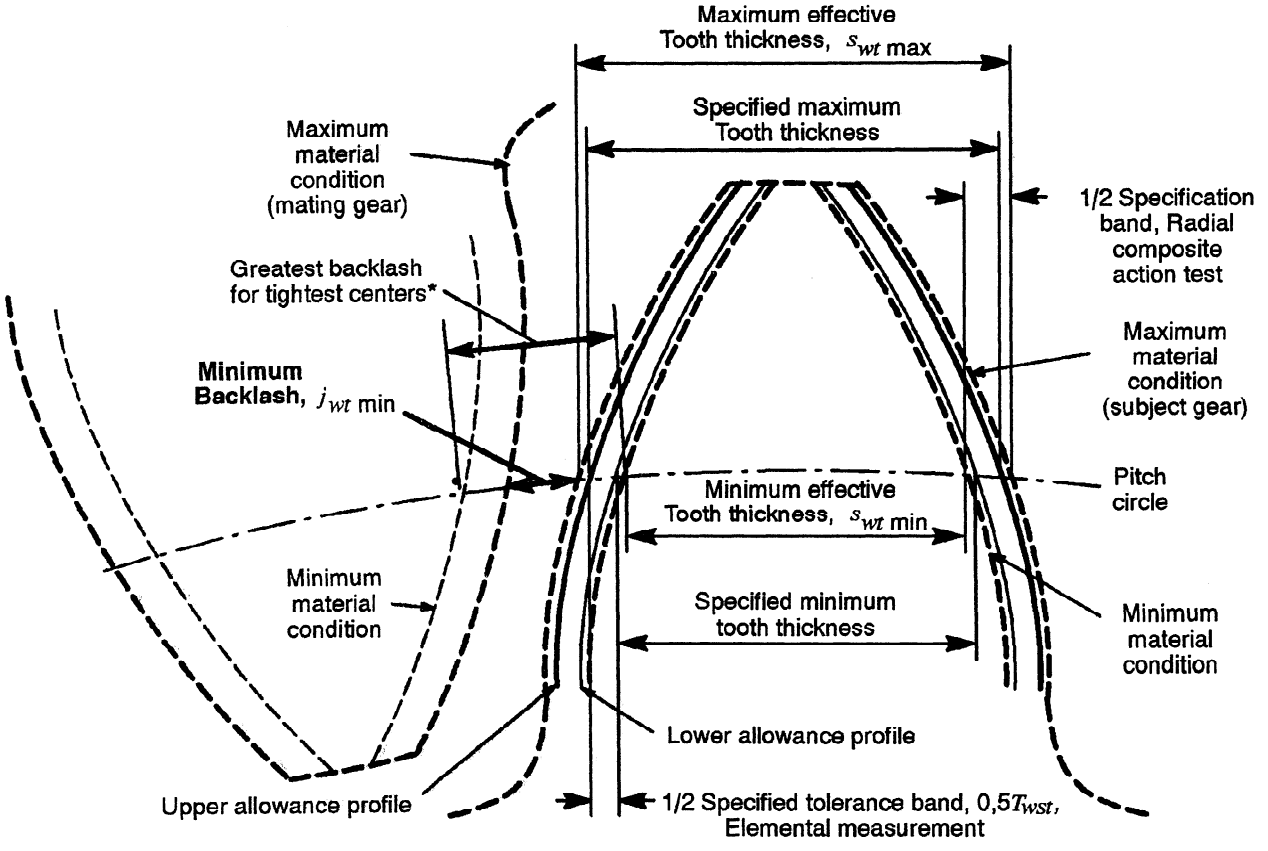

* THIS FIGURE IS DRAWN AT THE POSITION OF TIGHTEST CENTER DISTANCE;
if center distance is increased backlash will increase.

Figure 2 - Tooth thickness, transverse plane

Circumferential backlash, j_{wt}, (figure 3) is the maximum length of arc of the pitch circle through which a gear can be rotated when the mating gear is fixed.

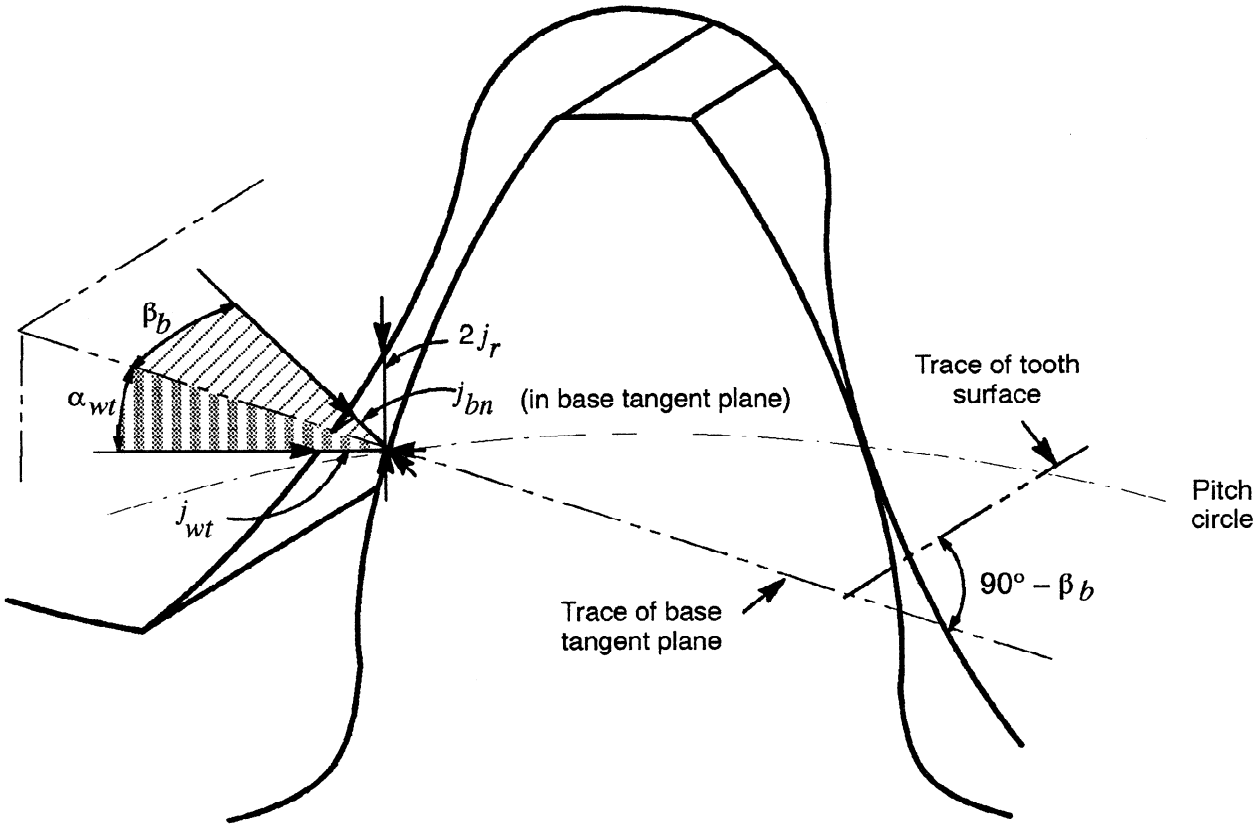

Figure 3 - Relationship between circumferential j_{wt}, normal j_{bn}, and radial j_r backlash

Normal backlash, j_{bn}, (figure 3) is the shortest distance between non-working flanks of two gears when the working flanks are in contact. The relationship with the circumferential backlash, j_{wt}, is in accordance with the following equation:

$$j_{bn} = j_{wt} \cos \alpha_{wt} \cos \beta_b \qquad ...(6)$$

Radial backlash, j_r, (figure 3) is the amount by which the center distance has to be diminished till the position in which left and right flanks of mating gears are in contact.

$$j_r = \frac{j_{wt}}{2 \tan \alpha_{wt}} \qquad ...(7)$$

Minimum backlash, $j_{wt\,min}$, is the minimum circumferential backlash on the pitch circle when the gear tooth with the greatest allowable effective tooth thickness is in mesh with the mating gear tooth having its greatest allowable effective tooth thickness, at the tightest allowable center distance, under static conditions (figure 2).

The tightest center distance is the minimum working center distance for external gears and the maximum working center distance for internal gears.

Maximum backlash, $j_{wt\,max}$, is the maximum circumferential backlash on the pitch circle when the gear tooth with the smallest allowable effective tooth thickness is in mesh with the mating gear tooth having its smallest allowable effective tooth thickness at the largest allowable center distance under static conditions (figure 2).

4 Measurement of radial composite deviations

4.1 Checking principle

Radial composite deviations are checked on a device on which pairs of gears are assembled with one gear on a fixed spindle, the other on a spindle carried on a slide provided with a spring arrangement enabling the

gears to be held radially in close mesh (see figure 4). During rotation, variation of center distance is measured and when desired, a diagram is generated.

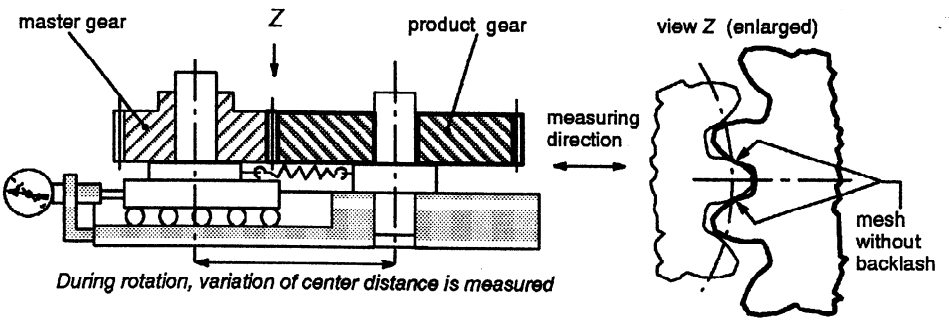

Figure 4 - Principle of measuring radial composite deviations

For most inspection purposes, product gears are tested against a master gear. Master gears are usually required to be so accurate that their influence on radial composite deviations can be neglected in which case an acceptable record is generated during one revolution of the product gear.

The total radial composite deviation F_i'' of the gear under inspection is equal to the maximum variation of center distance during one revolution. It can be determined from the recorded diagram. The tooth-to-tooth radial composite deviation f_i'' is equal to the variation of center distance during rotation through one pitch angle (see figure 5).

The tolerance values given in ISO 1328-2 are valid for measurements made using a master gear.

It is important to note that the accuracy and design of the master gear, especially its pressure angle of engagement with the product gear, can influence the test results. The master gear should have sufficient depth of engagement to be capable of contact with the entire active profile of the product gear but should not contact its non-active or root parts. Such contact can be avoided when the master gear teeth are thick enough to compensate for the product gear backlash allowance.

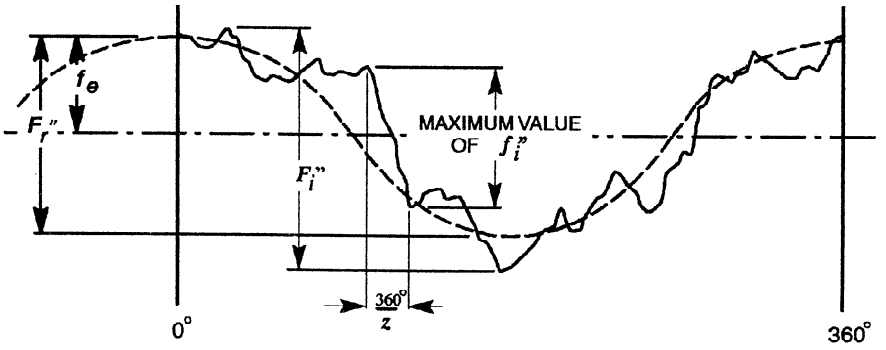

Figure 5 - Radial composite deviation diagram

When they are to be used for the quality grading of accurate gears, the accuracy of the master gear and the measuring procedure used should be agreed between the purchaser and manufacturer.

The tolerances have been established for spur gears and can be used to determine an accuracy grade. When used for helical gears, the master gear facewidth should be such that $\varepsilon_{\beta\ test}$ is less than or equal to 0,5 with the product gear. The design of the master gear shall be agreed upon between purchaser and manufacturer. The overlap ratio, $\varepsilon_{\beta\ test}$, may influence the results of radial composite measurements of helical gears. The effects of profile deviations, which would be evident with spur gears, may be concealed because of the multiple tooth and diagonal contact lines with helical gears.

A chart recording of approximate sinusoidal form (with amplitude f_e) over a single revolution indicates eccentricity, f_e , of the gear teeth. Reference to figure 5 shows how such a sinusoidal curve can be drawn on the diagram. Eccentricity of a gear is the deviation between the geometrical axis of the teeth and the reference axis (i.e., the bore or shaft).

4.2 The utility of radial composite deviation data

Radial composite deviations include components from the combined deviations of right and left flanks. Therefore, determination of the individual deviations of corresponding flanks is not feasible. The measurement of radial composite deviations quickly provides information on deficiencies of quality related to the production

machine, the tool or the product gear setup. The method is chiefly used for carrying out checking of large quantities of production gears, as well as fine pitch gears.

Tooth-to-tooth composite deviations occurring at each pitch increment tend to indicate profile deviations (often profile slope deviations). A large isolated tooth-to-tooth composite deviation may indicate a large single pitch deviation or damaged tooth (see figure 6).

With appropriate calibration of the product gear setup and checking methods, the measuring process can also be used to determine the center distance at which the product gear may be meshed with minimum backlash. See ISO/TR 10064-3 for recommendations on shaft center distance and parallelism of axes. Furthermore, the procedure is useful for checking gears required to operate with minimum backlash, since the range of functional tooth thickness can readily be derived from the radial composite deviations.

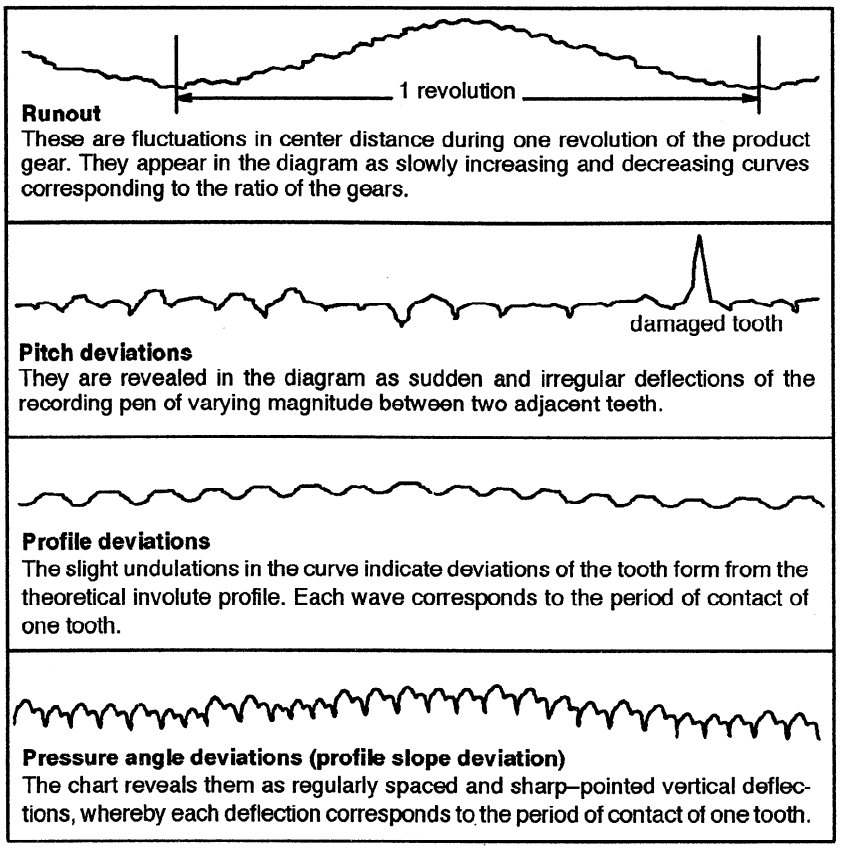

Figure 6 - Interpretation of radial composite deviation

For the determination of an accuracy grade:

a) For a spur gear, the product gear is to be checked against a master gear capable of making 100% contact with the active flanks. See ISO 1328-2 clause 5.5. The tolerance values of total and tooth-to-tooth radial composite deviations to determine an accuracy grade for spur gears are given in ISO 1328-2. It is emphasized that because of the simultaneous contributions from both sets of tooth flanks, such an accuracy grade cannot be directly related to an accuracy grade determined by inspection of individual element deviations.

b) For a helical gear, although the tolerances in ISO 1328-2 are for spur gears, when agreed between purchaser and manufacturer they also can be used for evaluation, provided that $\varepsilon_{\beta\ test}$ with the master gear is appropriate, as described in 4.1.

5 Measurement of runout, determining eccentricity

5.1 Measuring principle

Relative to the gear reference axis, the runout, F_r, of gear teeth is the difference between the maximum and the minimum radial positions of a suitable probe tip: ball, anvil, cylinder or prism, which is placed successively in each tooth space as the gear is rotated (see figure 7).

If a ball, cylinder, or anvil that contacts both sides of a tooth space is used, the tolerance tables in ISO 1328-2 Annex B may be applied. In some instances, it is desirable to use a rider that contacts both sides of a tooth. If this is done, the tolerance tables are not intended to apply.

The diameter of the ball shall be selected such that it contacts the tooth at mid-tooth depth and it should be placed at mid-facewidth (see 6.3 for the calculation of ball diameter).

5.2 Anvil size for measuring runout

The anvil size is chosen so that it contacts the flanks on each side of the space approximately at the reference circle. The prism half angle, δ_{yt}, can be determined by the following approximations, where δ_{yt}, α_{yt}, and η_{yt} are angles of contact on the measuring circle (see figure 8).

The anvil should touch the tooth flanks at mid-face width on the measuring circle with diameter d_y.

$$\delta_{yt} = \alpha_{yt} + \eta_{yt} \quad ...(8)$$

$$\cos\alpha_{yt} = \frac{d\cos\alpha_t}{d_y} \quad ...(9)$$

$$\tan\alpha_t = \frac{\tan\alpha_n}{\cos\beta} \quad ...(10)$$

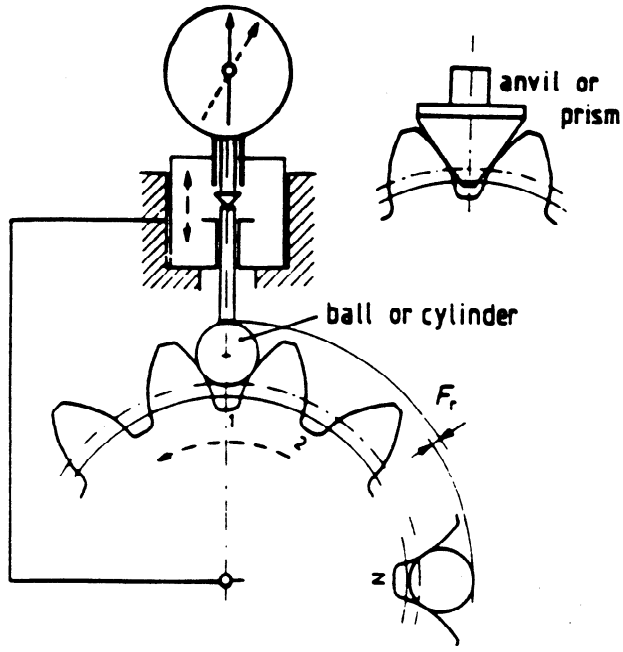

Figure 7 - Principle of measuring runout

$$d_y = d + 2m_n x \quad ...(11)$$

$$\eta_{yt} = \frac{180}{\pi}\left(\frac{\pi}{z} - \frac{s_{yt}}{d_y}\right) \quad ...(12)$$

For external gears:

$$s_t = \frac{m_n}{\cos\beta}\left(\frac{\pi}{2} + 2\tan\alpha_n x\right)$$

$$s_{yt} = d_y\left(\frac{s_t}{d} + \operatorname{inv}\alpha_t - \operatorname{inv}\alpha_{yt}\right)$$

For internal gears:

$$s_t = \frac{m_n}{\cos\beta}\left(\frac{\pi}{2} - 2\tan\alpha_n x\right) \quad ...(13)$$

$$s_{yt} = d_y\left(\frac{s_t}{d} - \operatorname{inv}\alpha_t + \operatorname{inv}\alpha_{yt}\right) \quad ...(14)$$

$$\tan\beta_y = \frac{d_y}{d}\tan\beta \quad ...(15)$$

$$\tan\delta_{yn} = \tan\delta_{yt}\cos\beta_y \quad ...(16)$$

5.3 Measuring runout

The simple nature of the measurement permits a wide range of choices of measuring equipment and degree of automation. Some methods are briefly described in the following paragraphs.

5.3.1 Measurement with intermittent indexing of the product gear A simple method in which the gear is intermittently rotated by hand is often used for small gears. The probe, placed in successive tooth spaces, is brought into line for measurement and recording of any deviation of radial position relative to a datum radial settling. When indexing and alignment are affected by an indexing device, the gauging instrument must have sufficient lateral movement to take into account the effects on alignment of pitch and helix deviations. This freedom of movement is necessary to ensure contact between the gauging equipment and both tooth flanks.

Multi-coordinate numerical control (CNC) measuring machines may also be used for this method of measurement. CNC results are affected by helix angle at the point of probe contact.

5.3.2 Measurement with continuously rotating product gear The anvil, in contact with both flanks of a tooth space, moves with rotation of the gear through a preset arc length. Radial deviations are measured either at the highest point of the arc, or at some other fixed point during the passage through the arc. This is a practical method for measuring the runout of large gears. Measurements can be made on measuring machines or generating machines, but care must be taken to ensure that the reference axis of the gear is concentric with the axis of rotation of the machine, and that the arc length is sufficient to indicate maximum deviation.

5.3.3 Approximation of runout from radial composite deviation Runout may be approximated from a radial composite test as $2f_e$ (see 4.1), by observing the change in center distance during one revolution of the product gear and a master gear on a gear rolling fixture (see figures 4 and 5). The gears are rolled together in tight mesh, with one member on a movable center which is spring or weight loaded. The readings include variations of the reference (master) gear and the deviations in the gear being tested. These should be considered when judging the acceptability of the gear being tested. To distinguish the runout determined from radial composite deviation from the measurement with a ball or cylinder, F_r, the first is represented with the symbol F_r''.

5.3.4 Measuring with coordinate measuring machine When using coordinate measuring machines, runout and pitch can be measured simultaneously. Two methods are described.

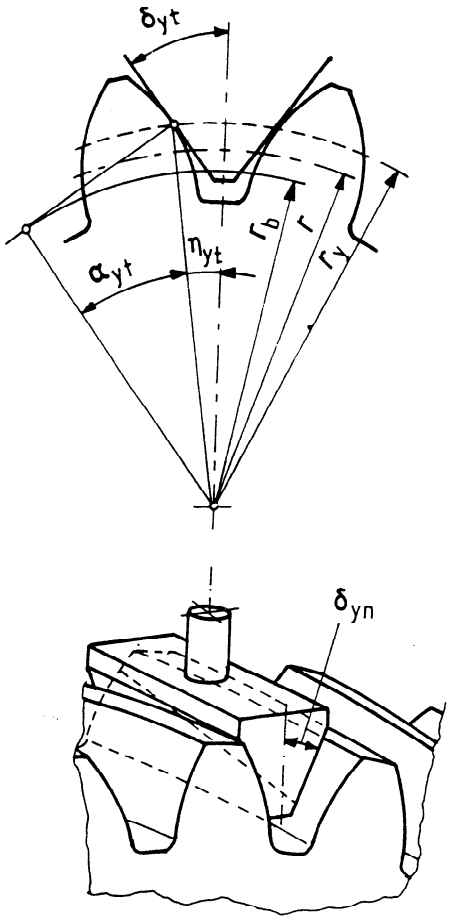

Figure 8 - Anvil size for measuring runout

a) Measurement with 2-flank contact. The probing sphere with an appropriate diameter is moved inside the tooth space until 2-flank contact is realized. Depending on the device and the gear parameters the measurement can be produced with a rotating table or without one, by means of an axis parallel probe or a star-probe. In the case where a star-probe is used, it is necessary to always use an 8 star-probe because of the contact conditions. See figure 9.

If a probe with a standard diameter is used the runout deviation in every tooth space has to be recalculated for the diameter given in the drawing. Considering the same pitch deviation in the tooth space the recorded runout deviation depends on the diameter used centering the sphere. Because of the changing profile angle at the touching points a smaller probe is more sensitive than a bigger one and gives greater deviation.

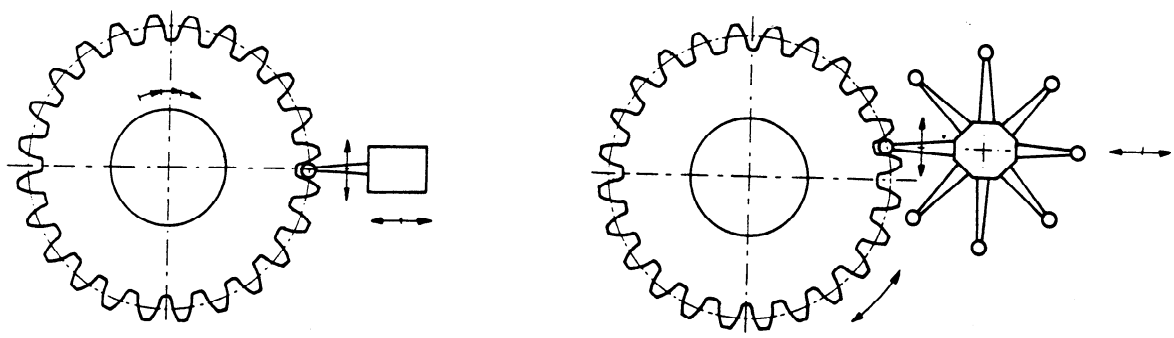

a) Runout test with rotating table (four axes) and axis parallel probe

b) Runout test without rotating table (three axes) with 8 - star probe

Figure 9 - Runout from coordinate measuring machine

b) Measurement with 1-flank contact. A probe with a small diameter is moved inside the tooth space. The left and right flanks are probed at the measurement circle. With these measurements the position of a sphere with a diameter as defined in 6.3 is calculated. Depending on the device and the gear parameters, the measurement can be processed with a rotating table or without one, with an axis parallel probe or by an 8 star-probe.

5.4 Evaluation of measurement

5.4.1 Runout F_r. The runout F_r is, with reference to the gear axis, equal to the algebraic difference between the maximum and minimum values of the radial deviation measured in accordance with 5.3. It is composed of roughly twice the eccentricity f_e, together with superimposed effects of pitch and profile deviations of the gear (see figure 10).

5.4.2 Eccentricity f_e. A diagram showing runout measured is shown in figure 10. The sinusoidal component of the curve roughly drawn by hand, or calculated by the least squares method, indicates (in the plane of measurement) the eccentricity of the teeth to the reference axis by an amount f_e (see figure 10).

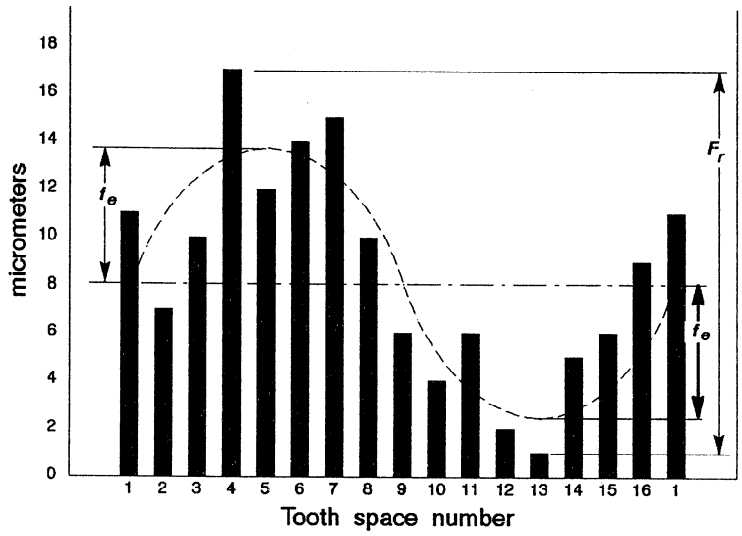

Figure 10 - Runout diagram of a gear with 16 teeth

5.5 Value of runout measurement

Control of runout of gears which are required to operate with minimal backlash, and of master gears to be used in the measurement of radial composite deviations, is of particular importance.

Measurement of runout as described is not necessary when the radial composite deviations of gears are to be measured. It is clear that details of single flank deviations such as pitch or profile deviations, cannot be derived from measured values of runout. For example, two gears of very different accuracy grades, with respect to ISO 1328-1, can have the same value of runout. This is because a gear contacts its mate on either right or left flanks, whereas runout values may be influenced by simultaneous measurement contact with both right and left flanks. The deviations of both flanks can have mutually compensated influences on runout. The extent of information which can be derived from the measurement of runout is largely dependent on knowledge of the machining process and the characteristics of the machines.

However, when the first batch of gears produced by a given method is inspected in detail in order to monitor compliance with a specified accuracy grade, variation in further production can be detected by measuring radial composite deviations, instead of repeating the detailed inspection.

5.6 The relation between runout and pitch deviations

When an otherwise perfect gear has an eccentric bore, eccentricity f_e as in figure 11, and it rotates about the axis of the bore, the runout F_r will approximately equal $2f_e$. Eccentricity causes single pitch deviations around the circumference of the gear with a maximum value of $f_{pt\,max} \approx 2f_e[\sin(180°/z)]/\cos\alpha_{yMt}$. The resulting cumulative pitch deviation also has a sinusoidal form, with a maximum value is $F_{p\,max} \approx 2f_e/\cos\alpha_{yMt}$. As shown in figure 11, the angle between the maximum cumulative pitch deviation and the "runout" is about 90°. The approximate value of this angle is 90° + α_t on the left flanks and 90° – α_t on the right flanks. Runout, caused by eccentricity, results in a variation in backlash, accelerations and decelerations due to pitch deviations.

However, when little or no runout is measured it does not mean that no pitch deviations are present. Machining using single indexing can create a gear as shown in figure 12, in which all tooth spaces are equal, resulting in no runout, while substantial pitch and cumulative pitch deviations are present. Figure 13 shows this condition graphically. Figure 14 shows an example of an actual gear with little runout and relatively large cumulative pitch deviations.

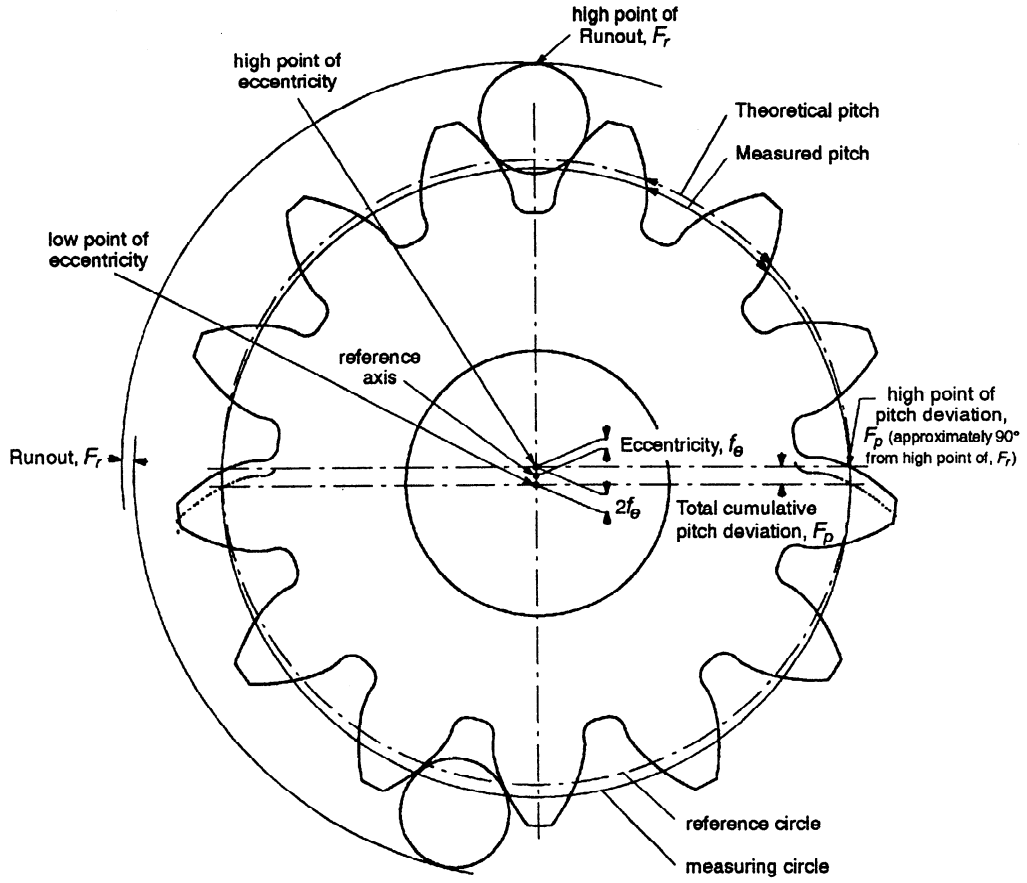

Figure 11 - Runout and pitch deviations of an eccentric gear

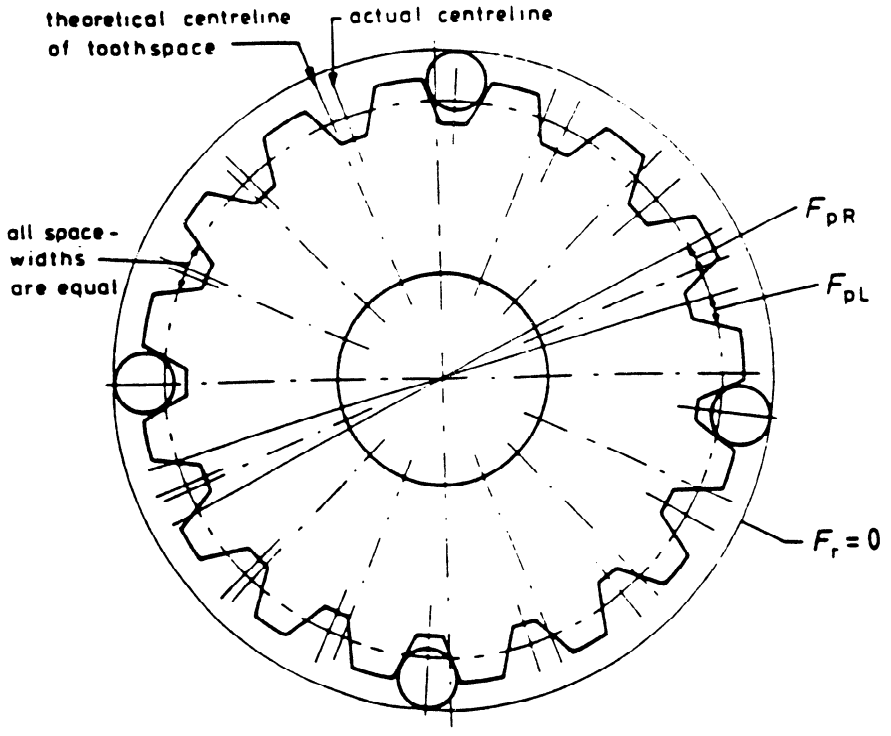

Figure 12 - Gear with zero runout, but with considerable pitch and cumulative pitch deviations (all space widths are equal)

This condition occurs with double flank processes, such as with form grinding or generating grinding (both of which index between grinding successive tooth spaces), when the bore of the gear is concentric with the axis

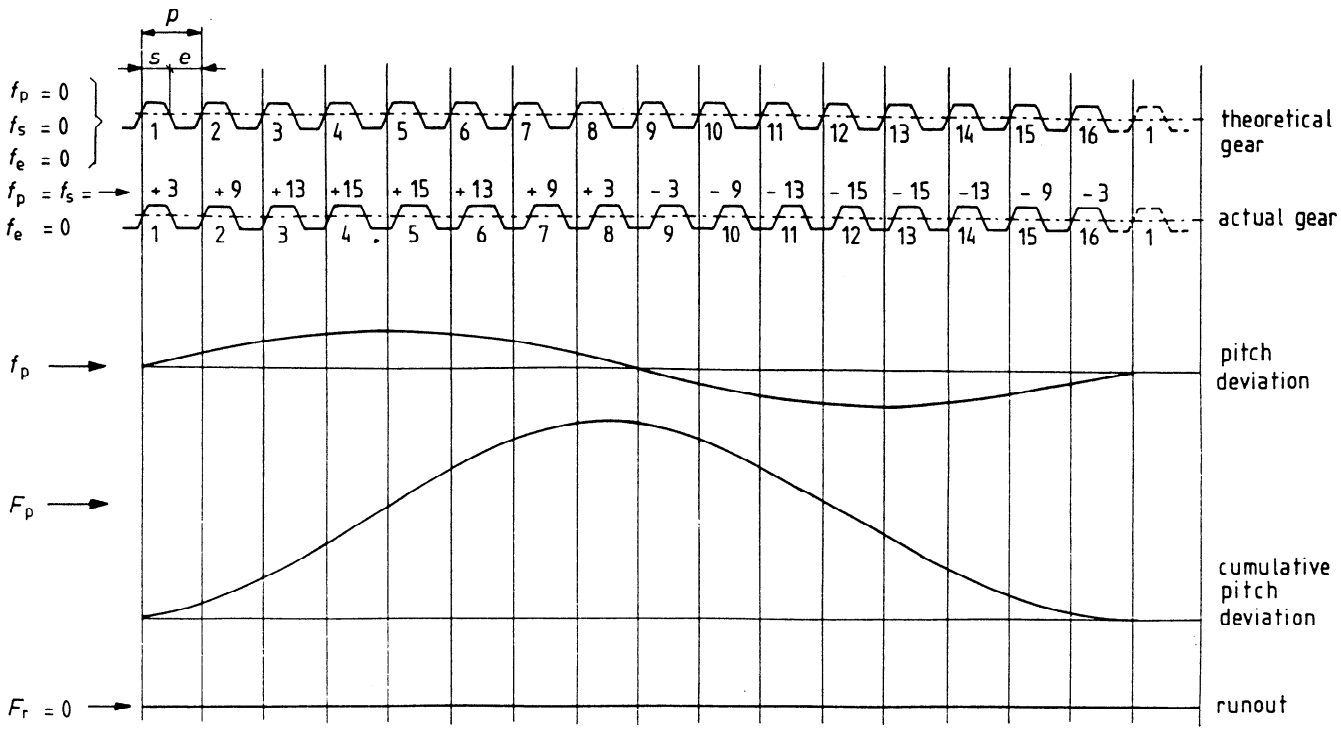

Figure 13 - Gear with pitch and cumulative pitch deviations and zero runout

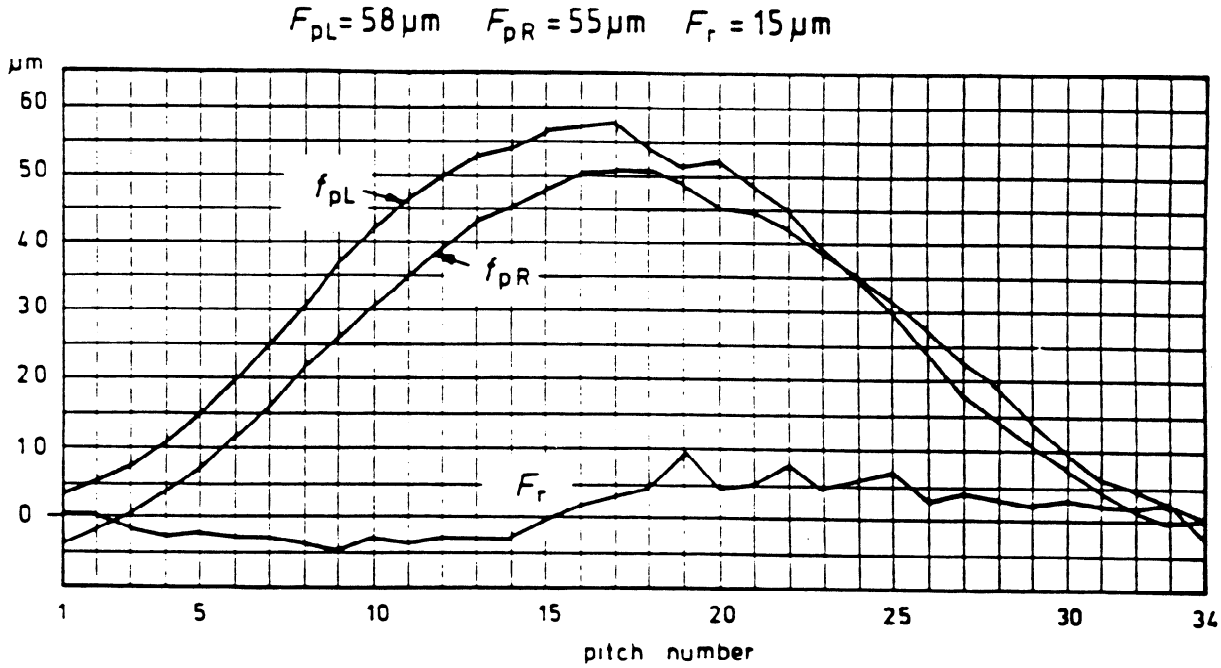

Figure 14 - Actual gear with little runout and substantial cumulative pitch deviation

of the machine table and the indexing mechanism generates a sinusoidal cumulative pitch deviation. The source of this cumulative pitch deviation may be eccentricity of the machine index wheel.

To reveal this condition on the gear, a modified runout check can be applied using a "rider" as a probe, see figure 15. The reason why this check detects the effect of the pitch deviations is that here the pitch deviation results in tooth thickness deviations, which a rider indicates as a radial change when contacting both flanks.

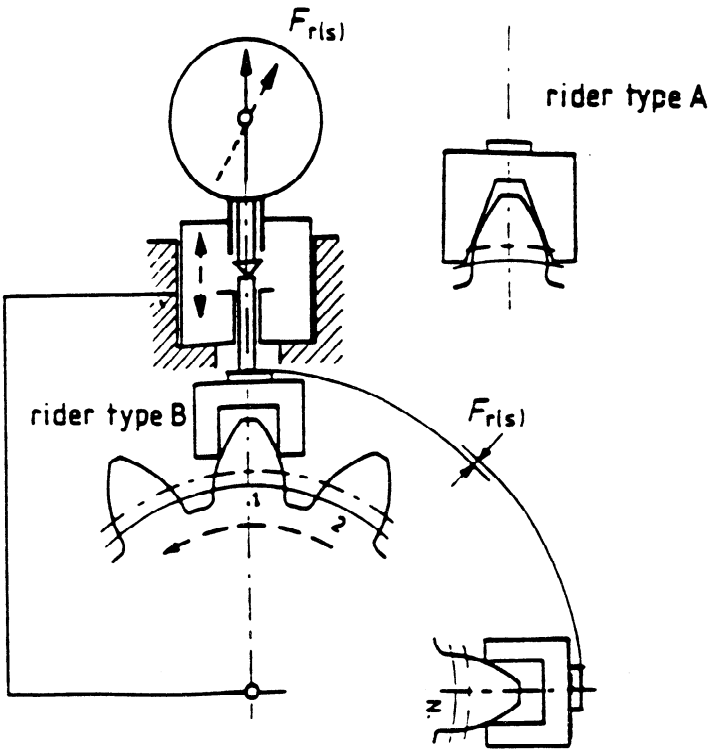

Figure 15 - Runout measurement with a rider when all space widths are equal and pitch deviations are present

6 Measurement of tooth thickness, tooth span and dimension over balls or cylinders

The measured tooth thickness is used to evaluate the size of an entire tooth or all of the teeth on a given gear. It can be based on a few measurements between two points or two very short contact lines. The nature and the location of these contacts is determined by the type of measurement (span, balls, cylinder or tooth caliper) and the influence of elemental deviations. It is customary to assume that the entire gear is characterized by the measured data from as few as one or two measurements.

Control of tooth thickness is essential for the mating gears to operate with the specified backlash. In some cases it is not easy, due to addendum modification, to check tooth thickness at the reference diameter d , so the formulae give the tooth thickness s for any diameter d_y . See figure 16. A recommended choice is $d_y = d + 2m_n x$.

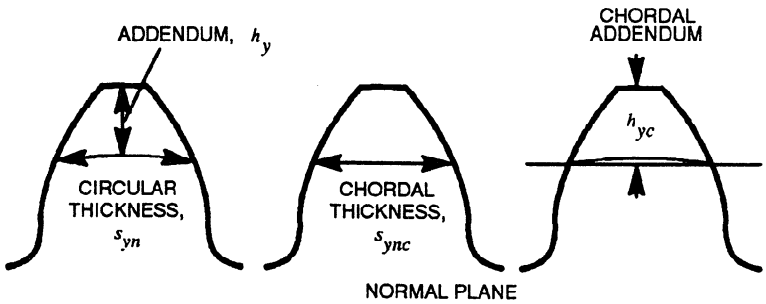

Figure 16 - Addendum and chordal tooth thickness

6.1 Tooth thickness measurement

A gear tooth caliper can be used for thickness measurement.

$$s_{yn} = s_{yt} \cos \beta_y \qquad \text{...(17)}$$

$$s_{ync} = d_{yn} \sin\left(\frac{s_{yn}}{d_{yn}} \frac{180}{\pi}\right) \qquad \text{...(18)}$$

See 5.2 for β_y

$$d_{yn} = d_y - d + \frac{d}{\cos^2\beta_b} \quad ...(19)$$

$$\sin\beta_b = \sin\beta \cos\alpha_n \quad ...(20)$$

For external gears, s_{yt} is in accordance with equation 14:

$$h_{yc} = h_y + \frac{d_{yn}}{2}\left[1 - \cos\left(\frac{s_{yn}}{d_{yn}}\frac{180}{\pi}\right)\right] \quad ...(21)$$

where

$$h_y = \frac{d_a - d_y}{2} \quad ...(22)$$

The gear tooth caliper cannot be used for internal gears.

Allowance for backlash is not included in the nominal value of s_{ync} tooth thickness. The nominal value is to be reduced by the amount of the upper and lower allowances E_{syns} and E_{syni} ...(23)

For E_{sns} and E_{sni} see 7.2. ...(24)

For α_{yt} see 5.2.The actual tooth thickness is to be ...(25)

E_{syni} and E_{syns} with appropriate mathematical sign.

The advantage of chordal thickness measurement by gear tooth caliper is that it uses a portable hand-held instrument. Portability and simplicity are its principal advantages. See figure 17.

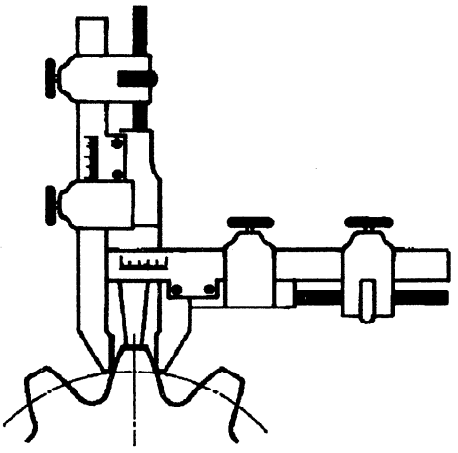

Figure 17 - Chordal tooth thickness measurement by gear tooth caliper

A limitation of chordal tooth thickness measurement is that the tooth caliper requires an experienced operator because the anvils make contact with the tooth flanks on their corners, rather than on the flats. Another is that measurement of the chordal tooth thickness with a tooth caliper is not reliable due to uncertainties (among other things) about tip cylinder accuracy and concentricity and the indifferent resolution of the measuring scale. Whenever practicable, more reliable span, pin, or ball measurements should be used instead.

6.2 Span measurement

The length W_k is the distance measured in a base tangent plane between two parallel planes touching a right flank and a left flank over k teeth of an external gear or over k tooth spaces of an internal gear. The distance is constant along all normals between and common to both tooth profiles (see figures 18 and 19).

In the practical measurement of external gears, the parallel planes are gauging surfaces with provision made for measuring the distance between them.

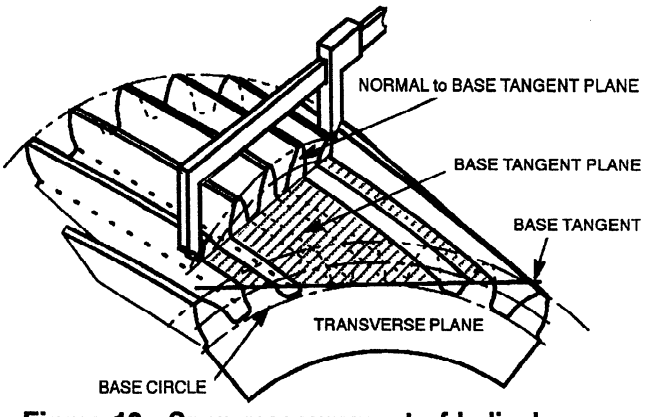

Figure 18 - Span measurement of helical gears

The number of teeth k between the gauge surfaces is chosen so that the lines of contact are roughly at mid-tooth depth, and is calculated as follows:
rounded to the nearest integer,

© ISO

$$k = \frac{W_y - s_{bn}}{\pi\, m_n \cos\alpha_n} + 1 = \frac{W_y - s_{bn}}{p_{bn}} + 1 \qquad \text{...(26)}$$

where

$$W_y = \frac{d_b \tan\alpha_{yt}}{\cos\beta_b} \qquad \text{...(27)}$$

For β_b see equation 20.

$$s_{bn} = m_n \cos\alpha_n \left(\frac{\pi}{2} + z \operatorname{inv}\alpha_t + 2\tan\alpha_n\, x \right) \qquad \text{...(28)}$$

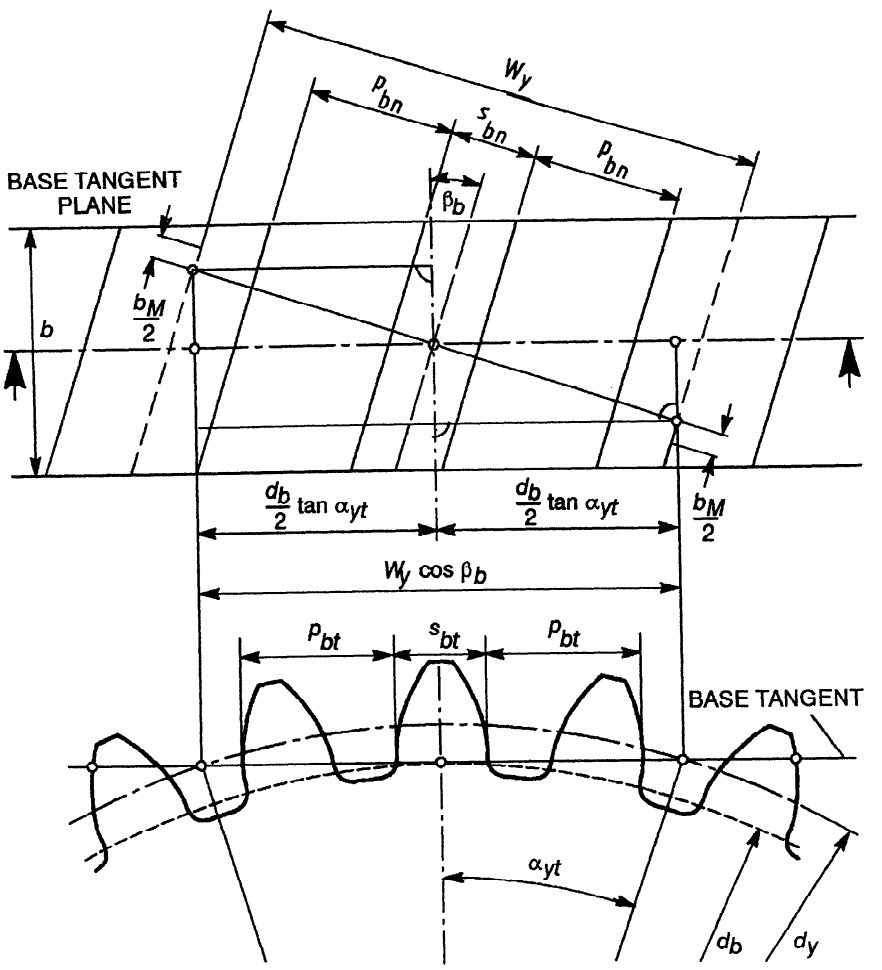

Figure 19 - Limits of span measurement in base tangent plane

For α_{yt} and α_t see equations 9 and 10. The span measurement is given by:

$$W_k = m_n \cos\alpha_n \left[(k - 0{,}5)\pi + z \operatorname{inv}\alpha_t + 2\tan\alpha_n\, x \right], \quad \text{or} \qquad \text{...(29)}$$

$$W_k = (k - 1)\, p_{bn} + s_{bn} \qquad \text{...(30)}$$

Backlash allowance is not included in a nominal value of W_k. The nominal value is to be reduced for external and increased for internal gears by the amount of upper and lower allowances E_{bns} and E_{bni} (see figure 1).

$$E_{bn\begin{pmatrix} s \\ i \end{pmatrix}} = E_{sn\begin{pmatrix} s \\ i \end{pmatrix}} \cos\alpha_n \qquad \text{...(31)}$$

a) For external gears:

$$W_k + E_{bni} \leq W_{k\,\text{actual}} \leq W_k + E_{bns} \qquad \text{...(32)}$$

b) For internal gears:

$$W_k - E_{bni} \leq W_{k\,\text{actual}} \leq W_k - E_{bns} \qquad \text{...(33)}$$

E_{bni} and E_{bns} with appropriate mathematical sign.

The span measuring method is not suitable for measurements of internal gears with helical teeth. Also for helical gears the span measuring method is limited by the facewidth of the gear. Measurement is possible if:

$$b > W_k \sin\beta_b + b_M \cos\beta_b\,, \quad \text{where } b_M = 5 \text{ or } b_M = m_n/4\,, \qquad \text{...(34)}$$

or let

$$b > 1{,}015\, W_k \sin\beta_b\,. \qquad \text{...(35)}$$

In case of profile or helix modifications, the span measurement should be carried out on the un-modified part of the tooth flank. For helix crowning, a correction should be made of the nominal tooth thickness of the span for helical teeth; for spur gears with crowning, the measurement should be carried out on the apex of the crowning.

6.3 Control of tooth thickness by determining the dimension over balls or cylinders

When the facewidth of a helical gear is too small to permit a measurement of span, an indirect check of tooth thickness can be made by measuring the dimension over or between two balls or cylinders (pins) placed in tooth spaces which are as nearly as possible diametrically opposite (figure 20).

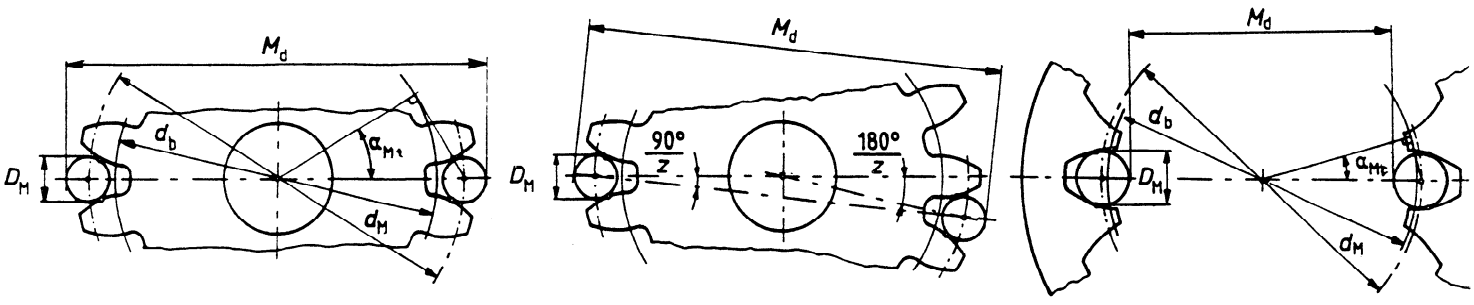

Figure 20 - Dimension M_d over (between) balls or cylinders for spur gear teeth

6.3.1 Dimensions of balls or cylinders D_M

a) For external gears:

$$D_{Mthe} = \frac{d_y \sin\eta_{yt}}{\cos(\alpha_{yt} + \eta_{yt})} \cos\beta_b \qquad \text{...(36)}$$

b) For internal gears:

$$D_{Mthe} = \frac{d_y \sin\eta_{yt}}{\cos(\alpha_{yt} - \eta_{yt})} \cos\beta_b \qquad \text{...(37)}$$

For α_{yt}, d_y, η_{yt} and β_b see equations 9, 11, 12 and 20;

D_M is to be chosen as the next larger diameter from the Renard Series R 40 or from a table of pins known to be available to the gear manufacturer, such as those listed in table 1. Also see figure 21.

Table 1 - Standard pin diameters in mm

2	5,5	16
2,25	6	18
2,5	6,5	20
2,75	7	22
3	7,5	25
3,25	8	28
3,5	9	30
3,75	10	35
4	10,5	40
4,25	11	45
4,5	12	50
5	14	-
5,25	15	-

© ISO

6.3.2 Dimensions over balls or cylinders M_d

a) For external gears with an even number of teeth;

$$M_d = \frac{m_n z \cos\alpha_t}{\cos\beta \cos\alpha_{Mt}} + D_M \qquad ...(38)$$

b) For external gears with an odd number of teeth;

$$M_d = \frac{m_n z \cos\alpha_t}{\cos\beta \cos\alpha_{Mt}} \cos\left(\frac{90}{z}\right) + D_M \qquad ...(39)$$

where:

$$\text{inv}\,\alpha_{Mt} = \text{inv}\alpha_t + \frac{D_M}{m_n z \cos\alpha_n} + \frac{2\tan\alpha_n x}{z} - \frac{\pi}{2z} \qquad ...(40)$$

c) For internal gears with an even number of teeth;

$$M_d = \frac{m_n z \cos\alpha_t}{\cos\beta \cos\alpha_{Mt}} - D_M \qquad ...(41)$$

d) For internal gears with an odd number of teeth;

$$M_d = \frac{m_n z \cos\alpha_t}{\cos\beta \cos\alpha_{Mt}} \cos\left(\frac{90}{z}\right) - D_M \qquad ...(42)$$

where:

$$\text{inv}\,\alpha_{Mt} = \text{inv}\,\alpha_t - \frac{D_M}{m_n z \cos\alpha_n} - \frac{2\tan\alpha_n x}{z} + \frac{\pi}{2z} \qquad ...(43)$$

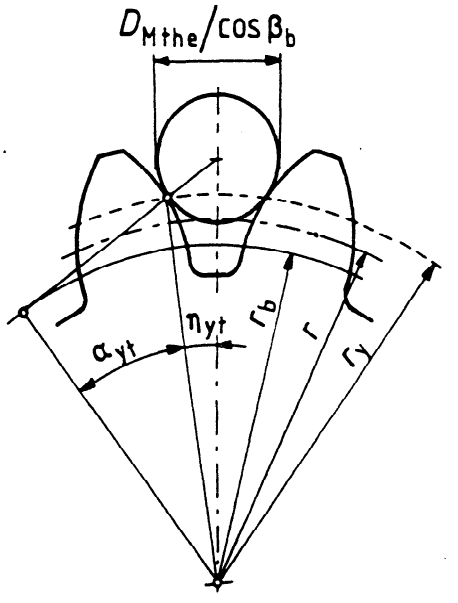

Figure 21 - Ball size

6.3.3 Backlash allowance measuring over balls or cylinders

Allowance for backlash is not included in the nominal value of M_d. The nominal value is to be reduced by the amount of upper and lower deviations E_{yns} and E_{yni}, converted by the following formulae, see 7.2.

With a even number of teeth;

$$E_{yn}\begin{pmatrix} s \\ i \end{pmatrix} \cong E_{sn}\begin{pmatrix} s \\ i \end{pmatrix} \frac{\cos\alpha_t}{\sin\alpha_{Mt}\cos\beta_b} \qquad ...(44)$$

With a odd number of teeth;

$$E_{yn}\begin{pmatrix} s \\ i \end{pmatrix} \cong E_{sn}\begin{pmatrix} s \\ i \end{pmatrix} \frac{\cos\alpha_t}{\sin\alpha_{Mt}\cos\beta_b} \cos\left[\frac{90}{z}\right] \qquad ...(45)$$

The dimension over balls or cylinders is then:

a) For external gears:

$$M_d + E_{yni} \leq M_{d\,\text{actual}} \leq M_d + E_{yns} \qquad ...(46)$$

b) For internal gears:

$$M_d - E_{yns} \leq M_{d\,\text{actual}} \leq M_d - E_{yni} \qquad ...(47)$$

E_{yni} and E_{yns} with appropriate mathematical sign.

For internal gears with helical teeth, only balls can be used. Micrometers with spherical anvils and spindle ends are often used for this measurement method. The minimum dimension measured is in a transverse plane between balls placed in diametrically opposite tooth spaces, and is the true dimension. When measuring helical gears with odd numbers of teeth, suitable means for positioning the balls in a transverse plane are required.

6.4 Tooth thickness measurement with radial composite measurement

The measurement of the tooth thickness with the radial composite measurement has the advantage that functional tooth thickness, which includes the effect of all tooth deviations, is measured. Where the size of the work permits, and the tooling can be justified, a radial composite action test, test radius measurement, is the best method to inspect tooth thickness. Radial composite action test measurement inspects every tooth of the product gear in one operation. This is much faster than making multiple measurements with the other methods.

However, this method is limited to medium and smaller gears, since testing machines capable of more than 500 mm center distance are rarely available. In special circumstances testing can be accomplished in place on the cutting machine.

Special attention must be paid to the mounting surfaces to assure that the test performed is representative of the gear as it will be installed. Special machines or attachments are required for internal gears.

Test machines must be carefully calibrated, particularly for fine pitch and high accuracy gears.

6.5 Calculations for radial composite action test measurement.

The following method applies to external gears.

The proportions of the master gear must be checked for proper meshing with the product gear to be sure that contact takes place near to the tip and true involute form diameters, without interference.

Master gears are usually marked with a *test radius* which is the radius at which they would mesh with a standard mating gear having a tooth thickness at the reference diameter d_2 of:

$$s_{t2} = \frac{\pi\, d_2}{2 z_2} \qquad \text{...(48)}$$

Special master gears are often required for spur gears with nonstandard proportions. Helical gears usually require special master gears.

Master gears must be made very accurately since any deviation in the master gear is added, in the test results, to the deviations in the product gear.

6.5.1 Maximum test radius

The maximum test radius is based on the maximum effective tooth thickness. The calculation method assumes that the errors in the master gear are too small to affect the test results. This requires a very accurate master gear, if precision gears are to be measured.

If two gears are in tight mesh, the sum of their tooth thicknesses on their operating pitch circles is equal to the circular pitch on that circle. Also, the operating pitch diameters of the two gears must be in proportion to the numbers of teeth. These relationships, with the fundamental tooth thickness equations, yield simultaneous equations, from which the operating transverse pressure angle can be found.

$$\text{inv}\,\alpha_{wt3} = \frac{s_{bt2} + s_{bt3} - p_{bt}}{d_{b2} + d_{b3}} \qquad \text{...(49)}$$

where

s_{bt2} is maximum transverse base tooth thickness of product gear, mm
s_{bt3} is transverse base tooth thickness of master gear, mm
d_{b2} is base circle diameter of product gear, mm
d_{b3} is base circle diameter of master gear, mm
α_{wt3} is transverse operating pressure angle in tight mesh, degrees
p_{bt} is transverse base pitch

α_{wt3} can also be calculated from:

$$\text{inv}\,\alpha_{wt3} = \left[\frac{\dfrac{(s_{n2} + s_{n3})}{m_n} - \pi}{z_2 + z_3}\right] + \text{inv}\,\alpha_t \qquad \ldots(50)$$

where

s_{n2} is normal tooth thickness of the product gear at the reference diameter, mm
s_{n3} is normal tooth thickness of the master gear at the reference diameter, mm
z_2 is number of teeth in product gear
z_3 is number of teeth in master gear

The maximum tooth thickness of the product gear at the reference circle is equal to the nominal tooth thickness minus the upper tooth thickness allowance for size.

All measurements are in the transverse plane.

The value of the maximum center distance a_{max} in millimeters is given by:

$$a_{max} = \frac{m_n \cos\alpha_n}{2\cos\beta_b \cos\alpha_{wt3}}(z_2 + z_3) \qquad \ldots(51)$$

The maximum test radius $r_{2\,max}$ is:

$$r_{2\,max} = a_{max} - r_3 \qquad \ldots(52)$$

where r_3 is the master gear test radius in mm.

6.5.2 Minimum test radius

Figure 22 illustrates a typical radial composite action test chart. The "trace for maximum gear" represents a gear which has a tooth at the maximum effective thickness, $s_{wt\,max}$. The tolerance band for radial composite action test or test center distance must allow the full deviation of the total radial composite tolerance plus the tooth thickness tolerance. Both components vary with the product gear size and accuracy.

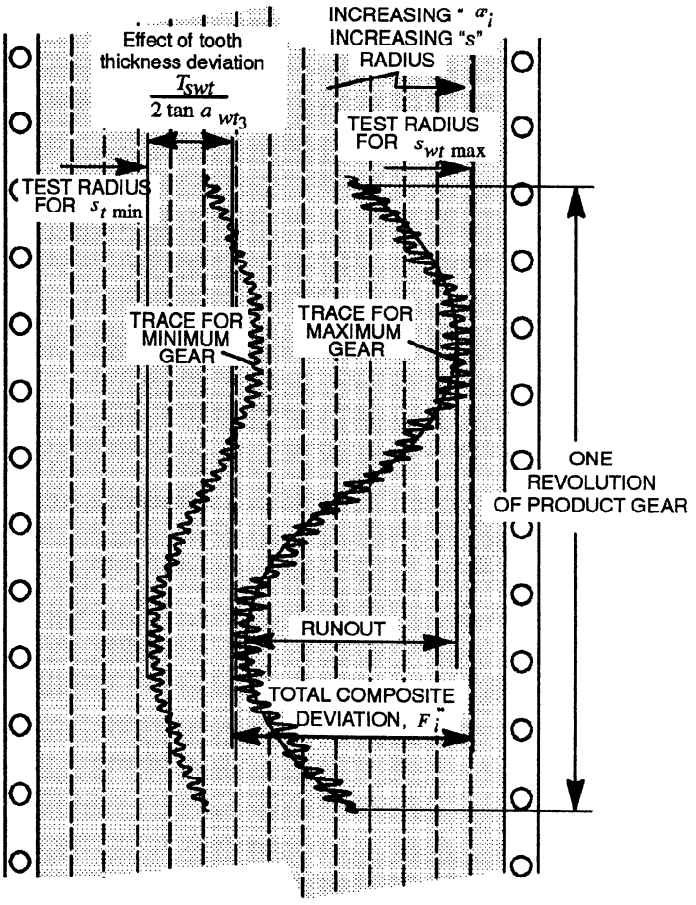

Figure 22 - Radial composite action test measurement of tooth thickness

In the following formula for a_{min}, the use of α_{wt3} for the minimum pressure angle is an approximation. If greater accuracy is required, recalculate using Equation 49 or 50 and a_{min}, iterating for a final value.

$$a_{min} = a_{max} - F_i'' - \frac{T_{swt}}{2\tan\alpha_{wt3}} \qquad \ldots(53)$$

where

a_{min} is minimum center distance
T_{swt} is transverse tooth thickness tolerance at operating diameter with the master

$$r_{2\,min} = a_{min} - r_3 \qquad \ldots(54)$$

$$T_{swt} = \frac{T_{sn}}{\cos\beta}\,\frac{d_w}{d} \qquad \ldots(55)$$

7 Gear limits and fits

7.1 Introduction

Assembled gears are mating product pieces requiring a clearance fit in order to assure unobstructed running. The gear pair elements determining the fit are (figure 23):

s_1 tooth thickness of the pinion
s_2 tooth thickness of the gear
a housing shaft center distance

Besides the size of these elements, the gear fit is also influenced by the form and position deviations of the gears and of the parallelism of axes.

The (actual) sizes of the tooth thicknesses of pinion and gear and of the shaft center distance, together with the respective gear element deviations, determine the backlash j of the gear teeth; i.e., the clearance between the non-working flanks at the working diameter.

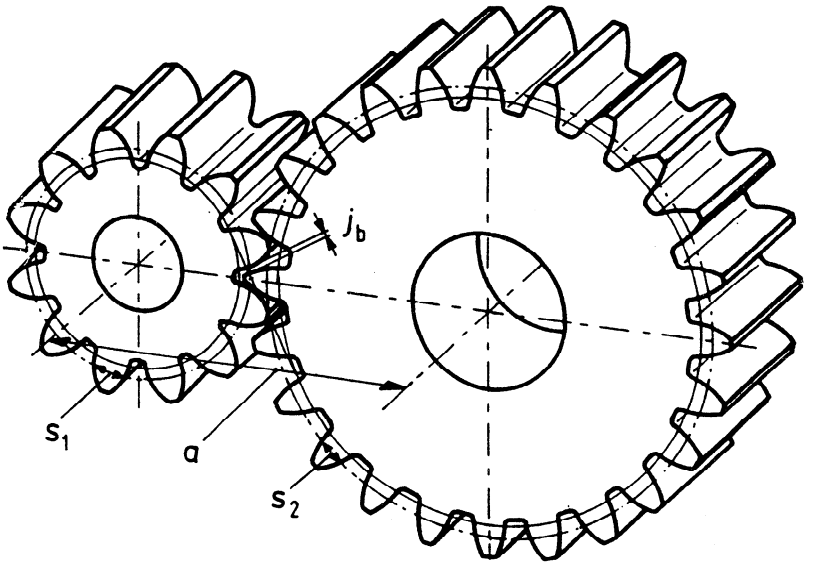

Figure 23 - Fit of gear teeth

Usually, maximum backlash does not affect the function or smoothness of transmission motion, and effective tooth thickness deviation is not the main consideration in the selection of gear accuracy. Under these conditions, the selection of thickness and measuring method is not critical and the most convenient method can be used. In many applications, allowing a larger range of tooth thickness tolerance or working backlash will not affect the performance or load capacity of gears and may allow more economical manufacturing. A tight tooth thickness tolerance should not be used unless absolutely necessary, since it has a strong influence on manufacturing cost. In those cases where maximum backlash must be closely controlled, a careful study of the influence factors must be made and the gear accuracy grade, center distance tolerance and measurement methods must be carefully specified.

It may be necessary to specify a more precise accuracy grade to hold maximum backlash within the desired limits.

Minimum working backlash may not be allowed to become zero or negative. Because working backlash is determined by the assembled backlash and the working conditions; i.e., by the influences of deflections, misalignment, bearing runouts, temperature effects, and any unknowns, one has to distinguish:

- assembled backlash, and
- working backlash.

Backlash does not have a fixed value, but may vary at different tooth positions due to manufacturing tolerances and working conditions.

This technical report is restricted to assembled backlash and tooth thickness. The measurement of shaft center distance and the parallelism of axes are embodied in ISO/TR 10064-3.

The form and position deviations of the gear elements are embodied in ISO 1328 Parts 1 and 2.

Advice on appropriate inspection methods is given in clause 6. Some guidance on calculating working backlash is given in Annex A.

7.2 Tooth thickness tolerances

The effects of the specific size tolerances used for gear teeth are dependent on the mounting. In addition, the measurement of size is dependent on methods used and tooth geometry deviations as discussed in ISO 1328-1 and ISO/TR 10064-1. In order to determine these effects, the calculations are made in the transverse plane, since the final gear motion transmitted and backlash are usually measured as circumferential values.

The values given for tooth thickness and backlash are to be selected by the designer to suit the application. It may be convenient to specify and measure normal to the tooth trace on the reference cylinder.

7.2.1 Upper allowance of size, E_{sns}

The upper size allowance is dependent on the reference diameter and the allowance. Their choice is largely independent of the gear tooth accuracy.

7.2.2 Lower allowance of size, E_{sni}

Lower size allowance is obtained by combining the upper size allowance with the tooth thickness tolerances. Since the upper and lower allowances always reduce tooth thickness, the amount of the tolerance has to be deducted from the upper size allowance.

$$E_{sni} = E_{sns} - T_{sn} \qquad \text{...(56)}$$

E_{sni} and E_{sns} with appropriate mathematical sign.

Note that:

$$T_{sn} = T_{st} \cos \beta \qquad \text{...(57)}$$

7.2.3 The normal tooth thickness tolerances, T_{sn}

The normal tooth thickness tolerance choice is largely independent of the gear tooth accuracy and should be governed by the manufacturing facilities. If maximum backlash has to be controlled for functional reasons, calculations such as provided in Annex A, will be necessary. It should be noted that small tooth thickness tolerances unfavorably affect manufacturing cost and the maintaining of gear tooth accuracy, since they unnecessarily limit the correction possibilities during manufacture.

Annex A
Backlash and Tooth Thickness Tolerance

A.1 Purpose

This Annex provides a rational method to select gear tooth thickness tolerances and minimum backlash. It also provides a method to calculate maximum expected backlash, in a gear mesh, using minimum backlash, tooth thickness tolerances, center distance tolerance and gear tooth accuracy tolerances. Suggested values for minimum backlash are included.

A.2 Backlash

Backlash j in an assembled gear set is the clearance between the teeth of the meshing gears. It is the amount by which the width of the tooth space exceeds the tooth thickness of the engaging tooth on the pitch circles. Backlash may be measured in the normal plane or along the line of action (see figure A1), but it is calculated and specified in the transverse plane or in the plane of action (base tangent plane).

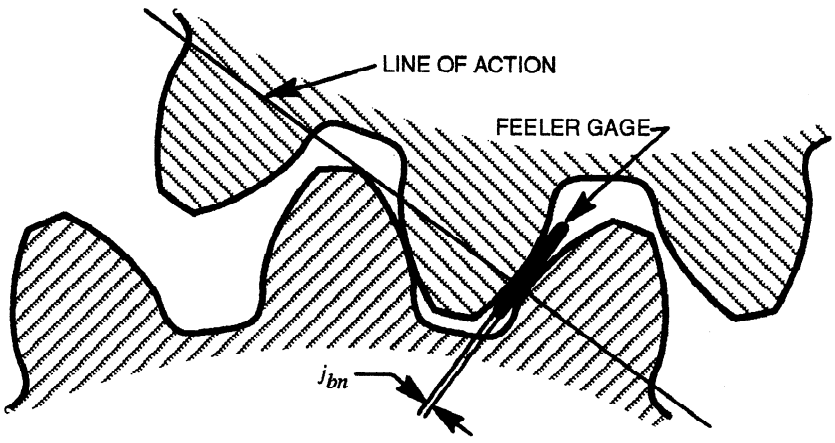

Figure A1 - Feeler gauge backlash measurement (normal plane)

An individual gear does not have backlash, it has only a tooth thickness. Backlash in a mesh is governed by the center distance at which a pair of gears is operated and the effective tooth thickness of each of the gears.

Some backlash should be present in all gear meshes. It is required to assure that the non-driving flanks of the teeth do not make contact. Backlash in a given mesh varies during operation as a result of changes in speed, temperature, load, etc. Adequate backlash should be present during static conditions, when it can be measured, to assure sufficient backlash under load at the most adverse working condition.

The amount of backlash required depends on the size of the gears, their accuracy, mounting and the application.

A.3 Maximum Tooth Thickness

Maximum tooth thickness of a gear is determined as if the gear were in mesh with a perfect mating gear at the minimum center distance, allowing for the desired minimum backlash. Tooth thickness deviations reduce the maximum tooth thickness from the maximum value, and increase backlash.

For $x = 0$ gears, the theoretical or nominal tooth thickness is customarily equal to one half the circular pitch on the reference circle. Unless otherwise specified, the actual maximum tooth thickness on an unassembled gear will usually be less than the theoretical value, since the manufacturer usually makes a reduction in tooth thickness to allow for backlash.

A.4 Minimum Backlash

Minimum backlash $j_{bn\,min}$ is the minimum backlash allowable when the gear tooth with the greatest allowable effective tooth thickness is in mesh with a mating tooth having its greatest allowable effective tooth thickness at the tightest allowable center distance, under static conditions. This is the traditional "backlash allowance" provided by the designer to provide for:

a) deflections of housings, shafts and bearings
b) misalignments of gear axes due to housing deviations and bearing clearances

c) skew of gear axes due to housing deviations and bearing clearances
d) mounting errors such as shaft eccentricity
e) bearing runouts
f) temperature effects (a function of temperature differences between housing and gear elements, center distance and material difference)
g) centrifugal growth of rotating elements
h) other factors, such as allowance for contamination of lubricant and swelling of non-metallic gear materials

The value of minimum backlash can be small if the factors listed above are controlled. Each factor can be evaluated by analyzing the tolerances, and then a minimum requirement can be calculated. Judgment and experience are required to assess the minimum expected requirement, since the worst case tolerances are not likely to coincide.

Table A.1 shows values of minimum backlash recommended for industrial drives with ferrous gears in ferrous housings, working at pitchline speeds less than 15 m/s, with typical commercial manufacturing tolerances for housings, shafts and bearings.

The values found in table A1 may be calculated from equation A.1.

$$j_{bn\,\min} = \left(\frac{2}{3}\right)[0{,}06 + 0{,}0005\,a_i + 0{,}03\,m_n] \qquad \text{...(A.1)}$$

Note: a_i must be an absolute value.

$$j_{bn} = |(E_{sns1} + E_{sns2})|\,\cos\alpha_n \qquad \text{...(A.2)}$$

If E_{sns1} and E_{sns2} are equal so that $j_{bn} = 2E_{sns}\cos\alpha_n$, cutting depths and root clearance of pinion and wheel are equal and contact ratio is maximum.

Table A1 - Recommended values minimum backlash $j_{bn\,\min}$ for coarse pitch gears

m_n in mm	Minimum center distance a_i in mm					
	50	100	200	400	800	1600
1,5	0,09	0,11	---	---	---	---
2	0,10	0,12	0,15	---	---	---
3	0,12	0,14	0,17	0,24	---	---
5	---	0,18	0,21	0,28	---	---
8	---	0,24	0,27	0,34	0,47	---
12	---	---	0,35	0,42	0,55	---
18	---	---	---	0,54	0,67	0,94

A.5 Specifications For Tooth Thickness Measurement

The maximum tooth thickness specified for any inspection method should be reduced to be sure that the effects of runout and other tooth cutting variations on the inspection results do not increase the maximum effective tooth thickness. The minimum specified tooth thickness should also be reduced, so that the tooth thickness tolerance selected is available for economical gear manufacture, and is not used up by the other tolerances implied by the accuracy grade.

A.6 Maximum Backlash

The maximum backlash in a gear set, $j_{bn\,\max}$, is the sum of tooth thickness tolerance, the effect of center distance variation, and the effects of gear tooth geometry variation. The theoretical maximum backlash occurs when two perfect gears, made to the minimum tooth thickness specification, are meshed at the loosest allowable center distance. The loosest center distance is the maximum for external gears or the minimum for internals.

The maximum theoretical backlash will also occur when two teeth, made to the minimum effective tooth thickness $s_{wt\,\min}$, coincide while operating at the loosest center distance. Neither occurrence is likely in practice.

Values of $s_{wt\,\min}$ are calculated as follows:

$$s_{wt\min} = s_{wt} - E_{sni}\frac{\cos\alpha_n}{\cos\beta_b}\frac{1}{\cos\alpha_{wt}} - 2F_i''\tan\alpha_{wt} \qquad \text{...(A.3)}$$

$$j_{wt\max} = p_{wt} - s_{wt\min 1} - s_{wt\min 2} - (a_{\max} - a_{\min})\,2\tan\alpha_{wt} \qquad \text{...(A.4)}$$

where

s_{wt} is the theoretical transverse tooth thickness at the working diameter;

p_{wt} is the working circular pitch.

Values of backlash at the working diameter can be converted to feeler gauge backlash j_{bn} as follows:

$$p_{wt} = \frac{2\pi a_{min}}{z_1 + z_2} \quad \text{...(A.5)}$$

$$j_{bn} = j_{wt} \cos\alpha_{wt} \cos\beta_b \quad \text{...(A.6)}$$

$$j_{bn} = j_{wn} \cos\alpha_n \quad \text{...(A.7)}$$

The maximum expected backlash is a function of $j_{bn\,max}$ and the statistical distribution of the individual elements of tooth and center distance variation. Any tooth deviations due to manufacturing will decrease the maximum expected backlash. Experience and judgment are required to estimate reasonable values.

If maximum backlash must be controlled, a careful study of each element of maximum backlash must be made and an accuracy grade selected which will limit tooth deviations as necessary.

When maximum backlash of an assembled gear drive, particularly a gear drive with multiple stages, is used as an acceptance criterion, the maximum acceptable value must be carefully chosen to allow reasonable manufacturing tolerances for each part in the assembly.

Annex B
Bibliography

B.1 Purpose

This Annex provides a list of references used in the development of ISO 10064-2.

ISO 701: 1976 International gear notation - Symbols for geometrical data

ISO 1122: 1983 Glossary of gears - Geometrical definitions

ISO/TR 10063: Cylindrical gears - Function groups, test groups, tolerance families *(in the state of preparation)*;

ISO/TR 10064-4: Cylindrical gears - Recommendations relative to surface roughness and tooth contact pattern checking (in the state of preparation)

This page intentionally left blank

© ISO/IEC

ICS 21.200

Descriptors: gears, cylindrical gears, teeth (mechanics), inspection, inspection by measurements, dimensional measurements, dimensional deviations, codes of good practice.

Price based on 19 pages