INTERNATIONAL STANDARD

ISO 5294

Third edition
2012-12-01

Synchronous belt drives — Pulleys

Transmissions synchrones par courroies — Poulies

Reference number
ISO 5294:2012(E)

© ISO 2012

Copyright International Organization for Standardization
Provided by IHS under license with ISO
No reproduction or networking permitted without license from IHS

Licensee=University of Alberta/5966844001, User=sharabiani, shahramfs
Not for Resale, 12/02/2013 04:56:42 MST

COPYRIGHT PROTECTED DOCUMENT

© ISO 2012

All rights reserved. Unless otherwise specified, no part of this publication may be reproduced or utilized in any form or by any means, electronic or mechanical, including photocopying and microfilm, without permission in writing from either ISO at the address below or ISO's member body in the country of the requester.

ISO copyright office
Case postale 56 • CH-1211 Geneva 20
Tel. + 41 22 749 01 11
Fax + 41 22 749 09 47
E-mail copyright@iso.org
Web www.iso.org

Published in Switzerland

© ISO 2012 – All rights reserved

Copyright International Organization for Standardization
Provided by IHS under license with ISO
No reproduction or networking permitted without license from IHS

Licensee=University of Alberta/5966844001, User=sharabiani, shahramfs
Not for Resale, 12/02/2013 04:56:42 MST

Contents

Page

Foreword ... **iv**

1 Scope ... **1**

2 Normative references ... **1**

3 Tooth dimensions ... **1**
3.1 Involute teeth ... 1
3.2 Straight-sided teeth ... 2
3.3 Pitch-to-pitch tolerances ... 2

4 Pulley dimensions ... **5**
4.1 Pulley width ... 5
4.2 Pulley diameter ... 6
4.3 Other pulley tolerances ... 10

5 Quality specifications ... **11**

6 Pulley designation ... **12**
6.1 Usual pulley designation ... 12
6.2 Alternate method for MXL and XXL pulleys ... 12

Annex A (normative) ... **13**

Bibliography ... **14**

© ISO 2012 – All rights reserved
Copyright International Organization for Standardization
Provided by IHS under license with ISO
No reproduction or networking permitted without license from IHS
Licensee=University of Alberta/5966844001, User=sharabiani, shahramfs
Not for Resale, 12/02/2013 04:56:42 MST

Foreword

ISO (the International Organization for Standardization) is a worldwide federation of national standards bodies (ISO member bodies). The work of preparing International Standards is normally carried out through ISO technical committees. Each member body interested in a subject for which a technical committee has been established has the right to be represented on that committee. International organizations, governmental and non-governmental, in liaison with ISO, also take part in the work. ISO collaborates closely with the International Electrotechnical Commission (IEC) on all matters of electrotechnical standardization.

International Standards are drafted in accordance with the rules given in the ISO/IEC Directives, Part 2.

The main task of technical committees is to prepare International Standards. Draft International Standards adopted by the technical committees are circulated to the member bodies for voting. Publication as an International Standard requires approval by at least 75 % of the member bodies casting a vote.

Attention is drawn to the possibility that some of the elements of this document may be the subject of patent rights. ISO shall not be held responsible for identifying any or all such patent rights.

ISO 5294 was prepared by Technical Committee ISO/TC 41, *Pulleys and belts (including veebelts)*, Subcommittee SC 4, *Synchronous belt drives*.

This third edition cancels and replaces the second edition (ISO 5294:1989), which has been technically revised.

© ISO 2012 – All rights reserved
Copyright International Organization for Standardization
Provided by IHS under license with ISO
No reproduction or networking permitted without license from IHS
Licensee=University of Alberta/5966844001, User=sharabiani, shahramfs
Not for Resale, 12/02/2013 04:56:42 MST

Synchronous belt drives — Pulleys

1 Scope

This International Standard specifies the principal characteristics of synchronous pulleys for use in synchronous endless belt drives for mechanical power transmission and where positive indexing or synchronization is required.

NOTE These drives have been known under various names in the past, for example: timing belt drives, positive belt drives, gear belt drives.

The principal characteristics include:

a) tooth dimensions and tolerances;

b) pulley dimensions and tolerances;

c) quality specification.

As far as dimensions are concerned, the pulleys specified in this International Standard are used interchangeably with the belts specified in ISO 5296.

2 Normative references

The following referenced documents are indispensable for the application of this document. For dated references, only the edition cited applies. For undated references, the latest edition of the referenced document (including any amendments) applies.

ISO 254, *Belt drives — Pulleys — Quality, finish and balance*

ISO 1101, *Geometrical product specifications (GPS) — Geometrical tolerancing — Tolerances of form, orientation, location and run-out*

ISO 5296, *Synchronous belt drives — Belts with pitch codes MXL, XXL, XL, L, H, XH and XXH — Metric and inch dimensions*

3 Tooth dimensions

3.1 Involute teeth

3.1.1 The involute tooth profile results in different dimensions for each pulley diameter. Therefore, to specify the involute tooth dimensions would require a very voluminous table. For this reason, as well as because of the difficulty in specifying the curved side of an involute tooth, dimensions are specified for the generating tool rack required to produce the involute tooth.

3.1.2 Dimensions and tolerances for the generating tool rack for synchronous pulleys with involute teeth are given in Table 1 and Figure 1.

© ISO 2012 – All rights reserved

Copyright International Organization for Standardization
Provided by IHS under license with ISO
No reproduction or networking permitted without license from IHS
Licensee=University of Alberta/5966844001, User=sharabiani, shahramfs
Not for Resale, 12/02/2013 04:56:42 MST

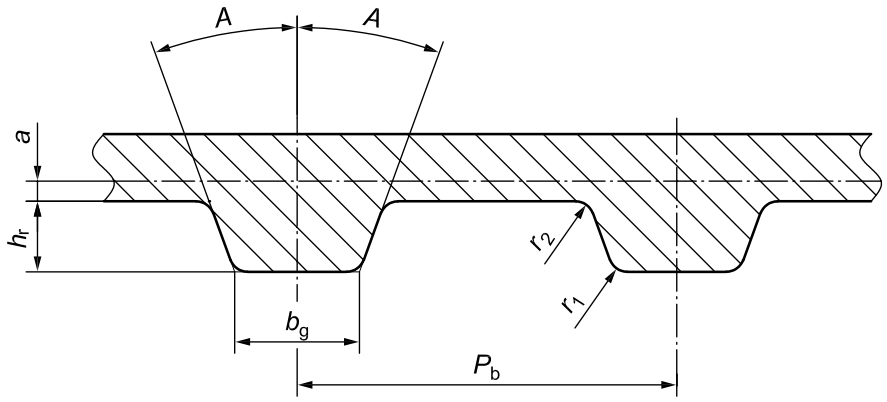

Figure 1 — Generating tool rack for pulleys with involute teeth

3.2 Straight-sided teeth

3.2.1 Involute teeth are normally recommended for synchronous belt drives. Since straight-sided teeth are in use, their specifications are also included.

3.2.2 Dimensions and tolerances for straight-sided teeth (see Figure 2) are given in Table 2.

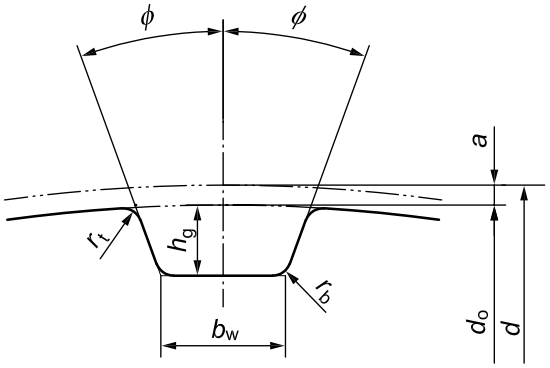

Figure 2 — Straight-sided teeth

3.3 Pitch-to-pitch tolerances

Tolerances on the amount of deviation of pitch between adjacent teeth, and on the summation of deviations within 90° arc of a pulley, are given in Table 3. This tolerance applies to the distance between the same point on either the right or left corresponding flanks of adjacent teeth.

© ISO 2012 – All rights reserved
Copyright International Organization for Standardization
Provided by IHS under license with ISO
No reproduction or networking permitted without license from IHS
Licensee=University of Alberta/5966844001, User=sharabiani, shahramfs
Not for Resale, 12/02/2013 04:56:42 MST

Copyright International Organization for Standardization
Provided by IHS under license with ISO
No reproduction or networking permitted without license from IHS

© ISO 2012 – All rights reserved

---,,,

Table 2 — Dimensions and tolerances for pulleys with straight-sided teeth

Pitch code	b_w				h_g		Φ degrees ±1,5	r_b max.		r_t				$2a$	
	mm		in.		mm	in.		mm	in.	mm		in.		mm	in.
MXL	0,84	±0,05	0,033	±0,002	$0{,}69^{\ 0}_{-0{,}05}$	$0{,}027^{\ 0}_{-0{,}002}$	20	0,25	0,010	$0{,}13^{+0{,}05}_{\ 0}$		$0{,}005^{+0{,}002}_{\ 0}$		0,508	0,020
XXL	$0{,}96^{+0{,}05}_{\ 0}$		$0{,}038^{+0{,}002}_{\ 0}$		$0{,}84^{\ 0}_{-0{,}05}$	$0{,}033^{\ 0}_{-0{,}002}$	25	0,35	0,014	0,30	±0,05	0,012	±0,002	0,508	0,020
XL	1,32	±0,05	0,052	±0,002	$1{,}65^{\ 0}_{-0{,}08}$	$0{,}065^{\ 0}_{-0{,}003}$	25	0,41	0,016	$0{,}64^{+0{,}05}_{\ 0}$		$0{,}025^{+0{,}002}_{\ 0}$		0,508	0,020
L	3,05	±0,10	0,120	±0,004	$2{,}67^{\ 0}_{-0{,}10}$	$0{,}105^{\ 0}_{-0{,}004}$	20	1,19	0,047	$1{,}17^{+0{,}13}_{\ 0}$		$0{,}046^{+0{,}05}_{\ 0}$		0,762	0,030
H	4,19	±0,13	0,165	±0,005	$3{,}05^{\ 0}_{-0{,}13}$	$0{,}120^{\ 0}_{-0{,}005}$	20	1,60	0,063	$1{,}60^{+0{,}13}_{\ 0}$		$0{,}063^{+0{,}005}_{\ 0}$		1,372	0,054
XH	7,90	±0,15	0,311	±0,006	$7{,}14^{\ 0}_{-0{,}13}$	$0{,}281^{\ 0}_{-0{,}005}$	20	1,98	0,078	$2{,}39^{+0{,}13}_{\ 0}$		$0{,}094^{+0{,}005}_{\ 0}$		2,794	0,110
XXH	12,17	±0,18	0,479	±0,007	$10{,}31^{\ 0}_{-0{,}13}$	$0{,}406^{\ 0}_{-0{,}005}$	20	3,96	0,156	$3{,}18^{+0{,}13}_{\ 0}$		$0{,}125^{+0{,}005}_{\ 0}$		3,048	0,120

Copyright International Organization for Standardization
Provided by IHS under license with ISO
No reproduction or networking permitted without license from IHS

Licensee=University of Alberta/5966844001, User=sharabiani, shahramfs
Not for Resale, 12/02/2013 04:56:42 MST

© ISO 2012 – All rights reserved

Table 3 — Pitch-to-pitch tolerances

Outside diameter d_o		Allowable deviation of pitch			
		Between any two adjacent teeth		Summation within a 90° arc	
mm	in.	mm	in.	mm	in.
$d_o \leq 25{,}4$	$d_o \leq 1$	0,03	0,001	0,05	0,002
$25{,}4 < d_o \leq 50{,}8$	$1 < d_o \leq 2$	0,03	0,001	0,08	0,003
$50{,}8 < d_o \leq 101{,}6$	$2 < d_o \leq 4$	0,03	0,001	0,10	0,004
$101{,}6 < d_o \leq 177{,}8$	$4 < d_o \leq 7$	0,03	0,001	0,13	0,005
$177{,}8 < d_o \leq 304{,}8$	$7 < d_o \leq 12$	0,03	0,001	0,15	0,006
$304{,}8 < d_o \leq 508{,}0$	$12 < d_o \leq 20$	0,03	0,001	0,18	0,007
$508{,}0 < d_o$	$20 < d_o$	0,03	0,001	0,20	0,008

4 Pulley dimensions

All geometric tolerancing references are as defined in ISO 1101.

4.1 Pulley width

The pulley width designation and the minimum actual pulley width required, b_f for flanged pulleys, and b_f' for unflanged pulleys (see Figure 3) are given in Table 4.

Users are advised that the values given for b_f apply also to pulleys with only one flange.

Table 4 — Pulley widths

Pitch code	Pulley width designation		Minimum flanged pulley width b_f		Minimum unflanged pulley width b_f'[a]	
	Metric dimensions	Inch (Imperial) dimensions	mm	in.	mm	in.
MXL	3,2 4,8 6,4	012 019 025	3,8 5,3 7,1	0,15 0,21 0,28	5,6 7,1 8,9	0,22 0,28 0,35
XXL	3,2 4,8 6,4	012 019 025	3,8 5,3 7,1	0,15 0,21 0,28	5,6 7,1 8,9	0,22 0,28 0,35
XL		025 031 037	7,1 8,6 10,4	0,28 0,34 0,41	8,9 10,4 12,2	0,35 0,41 0,48
L		050 075 100	14,0 20,3 26,7	0,55 0,80 1,05	17,0 23,3 29,7	0,67 0,92 1,17
H		075 100 150 200 300	20,3 26,7 39,4 52,8 79,0	0,80 1,05 1,55 2,08 3,11	24,8 31,2 43,9 57,3 83,5	0,98 1,23 1,73 2,26 3,29

[a] The minimum unflanged pulley width, b_f', may be reduced when the alignment of the drive can be controlled, but shall not be less than the minimum flanged pulley width, b_f.

© ISO 2012 – All rights reserved

Copyright International Organization for Standardization
Provided by IHS under license with ISO
No reproduction or networking permitted without license from IHS
Licensee=University of Alberta/5966844001, User=sharabiani, shahramfs
Not for Resale, 12/02/2013 04:56:42 MST

Table 4 *(continued)*

Pitch code	Pulley width designation		Minimum flanged pulley width b_f		Minimum unflanged pulley width b_f'[a]	
	Metric dimensions	Inch (Imperial) dimensions	mm	in.	mm	in.
XH		200 300 400	56,6 83,8 110,7	2,23 3,30 4,36	62,6 89,8 116,7	2,46 3,54 4,59
XXH		200 300 400 500	56,6 83,8 110,7 137,7	2,23 3,30 4,36 5,42	64,1 91,3 118,2 145,2	2,52 3,59 4,65 5,72

[a] The minimum unflanged pulley width, b_f', may be reduced when the alignment of the drive can be controlled, but shall not be less than the minimum flanged pulley width, b_f.

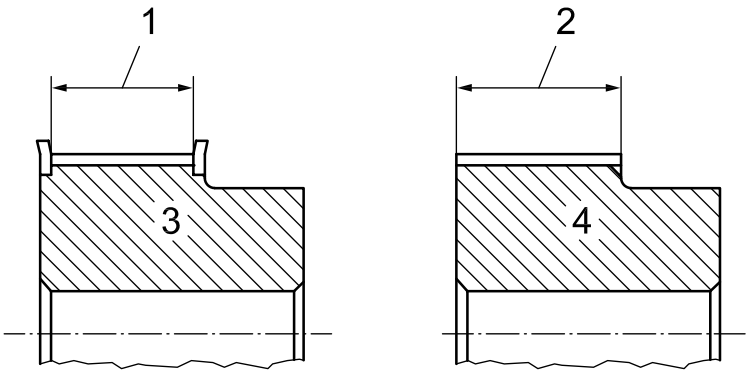

Key

1 b_f

2 b'_f

3 flanged pulley

4 unflanged pulley

Figure 3 — Minimum pulley width

4.2 Pulley diameter

4.2.1 Pulley diameters are given in Table 5.

© ISO 2012 – All rights reserved
Copyright International Organization for Standardization
Provided by IHS under license with ISO
No reproduction or networking permitted without license from IHS
Licensee=University of Alberta/5966844001, User=sharabiani, shahramfs
Not for Resale, 12/02/2013 04:56:42 MST

Table 5 — (1 of 3)— Pulley diameters

Number of teeth[a]	Pulley diameter											
	Pitch code MXL				Pitch code XXL				Pitch code XL			
	Pitch diameter		Outside diameter		Pitch diameter		Outside diameter		Pitch diameter		Outside diameter	
	mm	in.	mm	in.	mm	in.	mm	in.	mm	in.	mm	in.
10	6,47	0,255	5,96	0,235	10,11	0,398	9,60	0,378	16,17	0,637	15,66	0,617
11	7,11	0,280	6,61	0,260	11,12	0,438	10,61	0,418	17,79	0,700	17,28	0,680
12	7,76	0,306	7,25	0,286	12,13	0,478	11,62	0,457	19,40	0,764	18,90	0,744
13	8,41	0,331	7,90	0,311	13,14	0,517	12,63	0,497	21,02	0,828	20,51	0,808
14	9,06	0,357	8,55	0,337	14,15	0,557	13,64	0,537	22,64	0,891	22,13	0,871
15	9,70	0,382	9,19	0,362	15,16	0,597	14,65	0,577	24,26	0,955	23,75	0,935
16	10,35	0,407	9,84	0,387	16,17	0,637	15,66	0,617	25,87	1,019	25,36	0,999
17	11,00	0,433	10,49	0,413	17,18	0,676	16,67	0,656	27,49	1,082	26,98	1,062
18	11,64	0,458	11,13	0,438	18,19	0,716	17,68	0,696	29,11	1,146	28,60	1,126
19	12,29	0,484	11,78	0,464	19,20	0,756	18,69	0,736	30,72	1,210	30,22	1,190
20	12,94	0,509	12,43	0,489	20,21	0,796	19,70	0,776	32,34	1,273	31,83	1,253
(21)	13,58	0,535	13,07	0,515	21,22	0,836	20,72	0,816	33,96	1,337	33,45	1,317
22	14,23	0,560	13,72	0,540	22,23	0,875	21,73	0,855	35,57	1,401	35,07	1,381
(23)	14,88	0,586	14,37	0,566	23,24	0,915	22,74	0,895	37,19	1,464	36,68	1,444
(24)	15,52	0,611	15,02	0,591	24,26	0,955	23,75	0,935	38,81	1,528	38,30	1,508
25	16,17	0,637	15,66	0,617	25,27	0,995	24,76	0,975	40,43	1,592	39,92	1,572
(26)	16,82	0,662	16,31	0,642	26,28	1,035	25,77	,015	42,04	1,655	41,53	1,635
(27)	17,46	0,688	16,96	0,668	27,29	1,074	26,78	1,054	43,66	1,719	43,15	1,699
28	18,11	0,713	17,60	0,693	28,30	1,114	27,79	1,094	45,28	1,783	44,77	1,763
(30)	19,40	0,764	18,90	0,744	30,32	1,194	29,81	1,174	48,51	1,910	48,00	1,890
32	20,70	0,815	20,19	0,795	32,34	1,273	31,83	1,253	51,74	2,037	51,24	2,017
36	23,29	0,917	22,78	0,897	36,38	1,432	35,87	1,412	58,21	2,292	57,70	2,272
40	25,87	1,019	25,36	0,999	40,43	1,592	39,92	1,572	64,68	2,546	64,17	2,526
48	31,05	1,222	30,54	1,202	48,51	1,910	48,00	1,890	77,62	3,056	77,11	3,036
60	38,81	1,528	38,30	1,508	60,64	2,387	60,13	2,367	97,02	3,820	96,51	3,800
72	46,57	1,833	46,06	1,813	72,77	2,865	72,26	2,845	116,43	4,584	115,92	4,564
84												
96												
120												
156												

[a] Values for number of teeth in brackets are listed for information only and should be regarded as non-preferred sizes.

© ISO 2012 – All rights reserved

Copyright International Organization for Standardization
Provided by IHS under license with ISO
No reproduction or networking permitted without license from IHS
Licensee=University of Alberta/5966844001, User=sharabiani, shahramfs
Not for Resale, 12/02/2013 04:56:42 MST

Table 5 — (2 of 3)— Pulley diameters

Number of teeth[a]	Pulley diameter											
	Pitch code L				Pitch code H				Pitch code XH			
	Pitch diameter		Outside diameter		Pitch diameter		Outside diameter		Pitch diameter		Outside diameter	
	mm	in.	mm	in.	mm	in.	mm	in.	mm	in.	mm	in.
10	30,32	1,194	29,56	1,164								
11	33,35	1,313	32,59	1,283								
12	36,38	1,432	35,62	1,402								
13	39,41	1,552	38,65	1,522								
14	42,45	1,671	41,68	1,641	56,60	2,228	55,22	2,174				
15	45,48	1,790	44,72	1,760	60,64	2,387	59,27	2,333				
16	48,51	1,910	47,75	1,880	64,68	2,546	63,31	2,492				
17	51,54	2,029	50,78	1,999	68,72	2,706	67,35	2,652				
18	54,57	2,149	53,81	2,119	72,77	2,865	71,39	2,811	127,34	5,013	124,55	4,903
19	57,61	2,268	56,84	2,238	76,81	3,024	75,44	2,970	134,41	5,292	131,62	5,182
20	60,64	2,387	59,88	2,357	80,85	3,183	79,48	3,129	141,49	5,570	138,69	5,460
(21)	63,67	2,507	62,91	2,477	84,89	3,342	83,52	3,288	148,56	5,849	145,77	5,739
22	66,70	2,626	65,94	2,596	88,94	3,501	87,56	3,447	155,64	6,127	152,84	6,017
(23)	69,73	2,745	68,97	2,715	92,98	3,661	91,61	3,607	162,71	6,406	159,92	6,296
(24)	72,77	2,865	72,00	2,835	97,02	3,820	95,65	3,766	169,79	6,685	166,99	6,575
25	75,80	2,984	75,04	2,954	101,06	3,979	99,69	3,925	176,86	6,963	174,07	6,853
(26)	78,83	3,104	78,07	3,074	105,11	4,138	103,73	4,084	183,94	7,242	181,14	7,132
(27)	81,86	3,223	81,10	3,193	109,15	4,297	107,78	4,243	191,01	7,520	188,22	7,410
28	84,89	3,342	84,13	3,312	113,19	4,456	111,82	4,402	198,08	7,799	195,29	7,689
(30)	90,96	3,581	90,20	3,551	121,28	4,775	119,90	4,721	212,23	8,356	209,44	8,246
32	97,02	3,820	96,26	3,790	129,36	5,093	127,99	5,039	226,38	8,913	223,59	8,803
36	109,15	4,297	108,39	4,267	145,53	5,730	144,16	5,676	254,68	10,027	251,89	9,917
40	121,28	4,775	120,51	4,745	161,70	6,366	160,33	6,312	282,98	11,141	280,18	11,031
48	145,53	5,730	144,77	5,700	194,04	7,639	192,67	7,585	339,57	13,369	336,78	13,259
60	181,91	7,162	181,15	7,132	242,55	9,549	241,18	9,495	424,47	16,711	421,67	16,601
72	218,30	8,594	217,53	8,564	291,06	11,459	289,69	11,405	509,36	20,054	506,57	19,944
84	254,68	10,027	253,92	9,997	339,57	13,369	338,20	13,315	594,25	23,396	591,46	23,286
96	291,06	11,459	290,30	11,429	388,08	15,279	386,71	15,225	679,15	26,738	676,35	26,628
120	363,83	14,324	363,07	14,294	485,10	19,099	483,73	19,045	848,93	33,423	846,14	33,313
156					630,64	24,828	629,26	24,774				

[a] Values for number of teeth in brackets are listed for information only and should be regarded as non-preferred sizes.

© ISO 2012 – All rights reserved
Copyright International Organization for Standardization
Provided by IHS under license with ISO
No reproduction or networking permitted without license from IHS
Licensee=University of Alberta/5966844001, User=sharabiani, shahramfs
Not for Resale, 12/02/2013 04:56:42 MST

Table 5 — (3 of 3)— Pulley diameters

Number of teeth[a]	Pulley diameter			
	Pitch code XXH			
	Pitch diameter		Outside diameter	
	mm	in.	mm	in.
10				
11				
12				
13				
14				
15				
16				
17				
18	181,91	7,162	178,87	7,042
19	192,02	7,560	188,97	7,440
20	202,13	7,958	199,08	7,838
(21)	212,23	8,356	209,19	8,236
22	222,34	8,754	219,29	8,634
(23)	232,45	9,151	229,40	9,031
(24)	242,55	9,549	239,50	9,429
25	252,66	9,947	249,61	9,827
(26)	262,76	10,345	259,72	10,225
(27)	272,87	10,743	269,82	10,623
28	282,98	11,141	279,93	11,021
(30)	303,19	11,937	300,14	11,817
32	323,40	12,732	320,35	12,612
36	363,83	14,324	360,78	14,204
40	404,25	15,915	401,21	15,795
48	485,10	19,099	482,06	18,979
60	606,38	23,873	603,33	23,753
72	727,66	28,648	724,61	28,528
84	848,93	33,423	845,88	33,303
96	970,21	38,197	967,16	38,077
120	1212,76	47,746	1209,71	47,626
156				

[a] Values for number of teeth in brackets are listed for information only and should be regarded as non-preferred sizes.

© ISO 2012 – All rights reserved

Copyright International Organization for Standardization
Provided by IHS under license with ISO
No reproduction or networking permitted without license from IHS
Licensee=University of Alberta/5966844001, User=sharabiani, shahramfs
Not for Resale, 12/02/2013 04:56:42 MST

4.2.2 Tolerances on pulley outside diameter are given in Table 6.

Table 6 — Tolerances on outside diameter

Outside diameter d_o		Tolerance	
mm	in.	mm	in.
$d_o \leq 25{,}4$	$d_o \leq 1$	+0,05 0	+0,002 0
$25{,}4 < d_o \leq 50{,}8$	$1 < d_o \leq 2$	+0,08 0	+0,003 0
$50{,}8 < d_o \leq 101{,}6$	$2 < d_o \leq 4$	+0,10 0	+0,004 0
$101{,}6 < d_o \leq 177{,}8$	$4 < d_o \leq 7$	+0,13 0	+0,005 0
$177{,}8 < d_o \leq 304{,}8$	$7 < d_o \leq 12$	+0,15 0	+0,006 0
$304{,}8 < d_o \leq 508{,}0$	$12 < d_o \leq 20$	+0,18 0	+0,007 0
$508{,}0 < d_o \leq 762{,}0$	$20 < d_o \leq 30$	+0,20 0	+0,008 0
$762{,}0 < d_o \leq 1016{,}0$	$30 < d_o \leq 40$	+0,23 0	+0,009 0
$1016{,}0 < d_o$	$40 < d_o$	+0,25 0	+0,010 0

4.3 Other pulley tolerances

4.3.1 Tolerances on pulley axial circular run-out are given in Table 7.

Table 7 — Axial circular run-out

Outside diameter range d_o		FIM[a] max.	
mm	in.	mm	in.
$d_o \leq 25{,}4$	$d_o \leq 1$	0,05	0,002
$25{,}4 < d_o \leq 50{,}8$	$1 < d_o \leq 2$	0,08	0,003
$50{,}8 < d_o \leq 101{,}6$	$2 < d_o \leq 4$	0,10	0,004
$101{,}6 < d_o \leq 254{,}0$	$4 < d_o \leq 10$	0,001 mm per millimetre of outside diameter	0,001 in. per inch of outside diameter
$254{,}0 < d_o$	$10 < d_o$	0,25 mm + 0,000 5 mm per millimetre of outside diameter $d_o > 254{,}0$	0,01 in. + 0,000 5 in. per inch of outside diameter $d_o > 10$

[a] Full indicator movement.

© ISO 2012 – All rights reserved
Copyright International Organization for Standardization
Provided by IHS under license with ISO
No reproduction or networking permitted without license from IHS
Licensee=University of Alberta/5966844001, User=sharabiani, shahramfs
Not for Resale, 12/02/2013 04:56:42 MST

4.3.2 Tolerances on pulley radial circular run-out are given in Table 8.

Table 8 — Radial circular run-out

Outside diameter range d_o		**FIM[a] max.**	
mm	in.	mm	in.
$d_o \leq 25{,}4$	$d_o \leq 1$	0,05	0,002
$25{,}4 < d_o \leq 50{,}8$	$1 < d_o \leq 2$	0,07	0,003
$50{,}8 < d_o \leq 101{,}6$	$2 < d_o \leq 4$	0,10	0,004
$101{,}6 < d_o \leq 203{,}2$	$4 < d_o \leq 8$	0,13	0,005
$203{,}2 < d_o$	$8 < d_o$	0,13 mm + 0,000 5 mm per millimetre of outside diameter $d_o > 203{,}2$	0,005 in. + 0,000 5 in. per inch of outside diameter $d_o > 8$

[a] Full indicator movement.

4.3.3 Tolerances on pulley parallelism are given in Table 9.

Table 9 — Parallelism

Standard pulley width designation		**Tolerance**	
Metric dimensions	Inch (Imperial) dimensions	mm	in.
3,2 to 38,1	012 to 150	0,03	0,001 2
50,8 and 76,2	200 and 300	0,04	0,001 6
101,6 and 127	400 and 500	0,05	0,002 0

4.3.4 Tolerances on pulley cylindricity are given in Table 10.

Table 10 — Cylindricity

Standard pulley width designation		**Tolerance**	
Metric dimensions	Inch (Imperial) dimensions	mm	in.
3,2 to 12,7	012 to 050	0,02	0,000 8
19,1 to 38,1	075 to 150	0,04	0,001 6
50,8 and 76,2	200 and 300	0,08	0,003 1
101,6 and 127	400 and 500	0,12	0,004 7

5 Quality specifications

The quality, finish and balance of pulleys shall comply with the requirements specified in ISO 254.

© ISO 2012 – All rights reserved

Copyright International Organization for Standardization
Provided by IHS under license with ISO
No reproduction or networking permitted without license from IHS
Licensee=University of Alberta/5966844001, User=sharabiani, shahramfs
Not for Resale, 12/02/2013 04:56:42 MST

6 Pulley designation

6.1 Usual pulley designation

The pulley designation consists of the letter P (for pulley), the number of teeth, the pitch code and width designation.

EXAMPLE A synchronous pulley of 20 teeth, pitch code H (12,70 mm pitch) and pulley width 100 (25,4 mm) is designated as:

P 20 H 100

6.2 Alternate method for MXL and XXL pulleys

The pulley designation consists of the letter P (for pulley), the number of teeth, the pitch code and width designation.

EXAMPLE A synchronous pulley of 20 teeth, pitch code XXL (3,175 mm pitch) and pulley width 6,4 (6,4 mm) is designated as:

P 20 XXL 6,4

© ISO 2012 – All rights reserved
Copyright International Organization for Standardization
Provided by IHS under license with ISO
No reproduction or networking permitted without license from IHS
Licensee=University of Alberta/5966844001, User=sharabiani, shahramfs
Not for Resale, 12/02/2013 04:56:42 MST

Annex A
(normative)

A.1 Flange dimensions

The pulley flange dimensions are given in Table A.1 and Figure A.1.

Table A.1 — Minimum flange height

Pitch code	Minimum flange height h	
	mm	in.
MXL	0,5	0,02
XXL	0,8	0,03
XL	1,0	0,04
L	1,5	0,06
H	2,0	0,08
XH	4,8	0,19
XXH	6,1	0,24

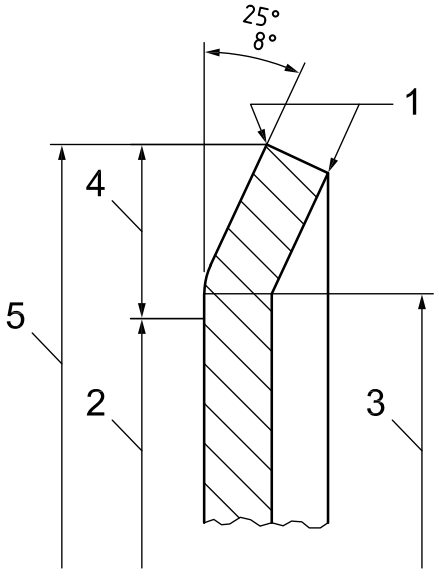

Key

1 break sharp corners
2 outside diameter, d_o
3 bend diameter, d_o+0,5 mm min.
4 minimum flange height, h
5 flange outside diameter, d_o+2h

Figure A.1 — Flange dimensions

© ISO 2012 – All rights reserved

Copyright International Organization for Standardization
Provided by IHS under license with ISO
No reproduction or networking permitted without license from IHS
Licensee=University of Alberta/5966844001, User=sharabiani, shahramfs
Not for Resale, 12/02/2013 04:56:42 MST

Bibliography

[1] ISO 5296, *Synchronous belt drives — Belts with pitch codes MXL, XXL, XL, L, H, XH and XXH — Metric and inch dimensions*

© ISO 2012 – All rights reserved
Copyright International Organization for Standardization
Provided by IHS under license with ISO
No reproduction or networking permitted without license from IHS
Licensee=University of Alberta/5966844001, User=sharabiani, shahramfs
Not for Resale, 12/02/2013 04:56:42 MST

Copyright International Organization for Standardization
Provided by IHS under license with ISO
No reproduction or networking permitted without license from IHS

Licensee=University of Alberta/5966844001, User=sharabiani, shahramfs
Not for Resale, 12/02/2013 04:56:42 MST

ICS 21.220.10

Price based on 14 pages

© ISO 2012 – All rights reserved

Copyright International Organization for Standardization
Provided by IHS under license with ISO
No reproduction or networking permitted without license from IHS

Licensee=University of Alberta/5966844001, User=sharabiani, shahramfs
Not for Resale, 12/02/2013 04:56:42 MST