Guide to

Calibration and setting-up of the ultrasonic time of flight diffraction (TOFD) technique for the detection, location and sizing of flaws

八 9.11.29 木

UDC 620.179.16.05:53.089.6

NO COPYING IN ANY FORM WITHOUT WRITTEN PERMISSION FROM BSI

BSI STANDARDS

Committees responsible for this British Standard

The preparation of this British Standard was entrusted by the Welding Standards Policy Committee (WEE/-) to Technical Committee WEE/46, upon which the following bodies were represented:

Aluminium Federation
Associated Offices Technical Committee
Association of Consulting Engineers
BNF (Fulmer Materials Centre)
British Airways
British Chemical Engineering Contractors' Association
British Coal Corporation
British Institute of Non-destructive Testing
British Non-Ferrous Metals Federation
British Railways Board
British Steel Industry
Department of Trade and Industry (Namas Executive)
Electricity Association
Health and Safety Executive
Institute of Physics
Institute of Quality Assurance
Light Metal Founders' Association
Lloyds Register of Shipping
Ministry of Defence
National Radiological Protection Board
Power Generation Contractors' Association (BEAMA Ltd.)
Railway Industry Association of Great Britain
Royal Society of Chemistry
Society of British Aerospace Companies Limited
Society of Motor Manufacturers and Traders Limited
Steel Casting Research and Trade Association
Welding Institute

This British Standard, having been prepared under the direction of the Welding Standards Policy Committee, was published under the authority of the Standards Board and comes into effect on 15 December 1993

© BSI 1993

The following BSI references relate to the work on this standard:
Committee reference WEE/46
Draft for comment 92/81577 DC

ISBN 0 580 22311 6

Amendments issued since publication

Amd. No.	Date	Text affected

标准分享网 www.bzfxw.com 免费下载

Contents

		Page
Committees responsible		Inside front cover
Foreword		2
Guide		
1	Scope	3
2	References	4
3	Definitions	4
4	Principles of the method	5
5	Equipment	8
6	Setting-up procedures for flaw detection	10
7	Interpretation of the data	17
8	Estimation of flaw dimensions after flaw detection	19
9	Setting-up procedures for accurate flaw sizing	20
10	Confirmatory measurements	22
11	Accuracy of measurement	22
12	Training and qualification	24
Annexes		
A	(informative) Special techniques based on TOFD	25
B	(informative) Application of TOFD and reporting criteria	25
C	(informative) Suggested steps towards the characterization of flaw echoes in TOFD	27
D	(informative) Examples of typical scans	33
E	(informative) Suggested framework for training and qualification	35
Figures		
1	D-scan (probe movement normal to beam)	3
2	B-scan (probe movement in direction of beam)	3
3	Diffraction from a crack-like flaw	6
4	Typical pattern of pulses from an internal flaw	7
5	Generalized two probe testing geometry	8
6	Calibration block for TOFD using V notch or electrodischarge machined slit	14
7	Gain setting using grain noise	16
List of references		Inside back cover

Foreword

This British Standard has been prepared under the direction of the Welding Standards Policy Committee. It supersedes DD 174 : 1988, which is withdrawn.

This revision incorporates updated guidance which has resulted from the increased application of the ultrasonic time of flight diffraction technique (TOFD) in industry. The TOFD technique was originally developed at the National Non-destructive Testing Centre at Harwell and has since seen application in a variety of industries. The primary objective of this British Standard is to facilitate the wide implementation of this relatively new non-destructive testing technology in industry. It is envisaged that this British Standard will in due course be superseded by standards that will detail the methods for TOFD technique examination for specific applications.

This British Standard provides guidance on the application of TOFD technique for the detection, location and sizing of flaws in materials. It may be expanded to cover other important applications of TOFD.

It is most important to bear in mind that echo amplitude is not used quantitatively by this technique for the determination of flaw size. The conventional amplitude-based flaw sizing associated with ultrasonics is thus largely invalid when this technique is used although it may be used for further discrimination.

The echo amplitude is only employed in TOFD measurements in connection with three tasks.

(a) Where the pulses from the flaws being sought have to be resolvable against the local noise background, for instance the ultrasonic grain scatter. To ensure that this is the case (or to place limits on the validity of a particular measurement) the known or experimentally determined variation of pulse amplitude as a function of range, position in the ultrasonic beam, etc. may be invoked.

(b) Where the relative amplitudes of echoes from the top and bottom extremities of flaws may provide important clues about the character of the flaw.

(c) Where the amplitude of the pulse from an artificial flaw can be used to confirm that system calibration has not changed during a measurement or from measurement to measurement.

The use of TOFD should be considered in any inspection task requiring rapid and reliable flaw detection coupled with an accurate assessment of flaw size. It can be adapted to many test geometries with little difficulty but special instructions and equipment may be needed for the inspection of complex geometries such as nodes or nozzles. Care should also be taken if the technique is considered for use on coarse-grained or ultrasonically difficult materials.

It is recognized that equipment suitable for carrying out the TOFD technique is not yet widely available and this British Standard, which is written in sufficiently general terms to be applicable to the types of equipment currently known to be employed for TOFD, describes the nature of the equipment required and also its calibration.

It is assumed in the drafting of this British Standard that the execution of its provisions is entrusted to appropriately qualified and experienced non-destructive testing personnel.

Compliance with a British Standard does not of itself confer immunity from legal obligations.

标准分享网 www.bzfxw.com 免费下载

Guide

1 Scope

This British Standard provides guidance for the calibration and setting-up of equipment for the use of the two probe version of TOFD both to locate and size flaws as a result of D-scanning (see figure 1) and to size flaws using linear and B-scanning (see figure 2).

The linear scan will cover many testpiece geometries of importance including butt welds in tubes, vessels and plates.

In clauses **4** to **7** of this British Standard it is assumed that only a simple D-scan is to be carried out; for example following the line of a weld. The data required to recognize and initially size potential flaws is thus obtained as a result of this single scan. This means that the potential accuracy of the technique will not be fully achieved.

For critical flaws, it is advisable to utilize TOFD in its most accurate sizing mode as a secondary technique. This involves the linear scan of the transducer pair across the flaw, perpendicular to the flaw's length direction, a process known as B-scanning. Clauses **8** to **11** of this British Standard describe this more accurate TOFD sizing approach in greater detail.

The manner in which the nature of the echoes observed may be used to provide a preliminary and conservative classification of flaws is described in clause **7**. Where there are difficulties in interpretation, further transverse TOFD scans or pulse echo measurements may resolve ambiguities.

Brief descriptions of special techniques based on TOFD which may be of use in particular inspections are given in annex A. Guidance on the application of TOFD and the reporting criteria is given in annex B.

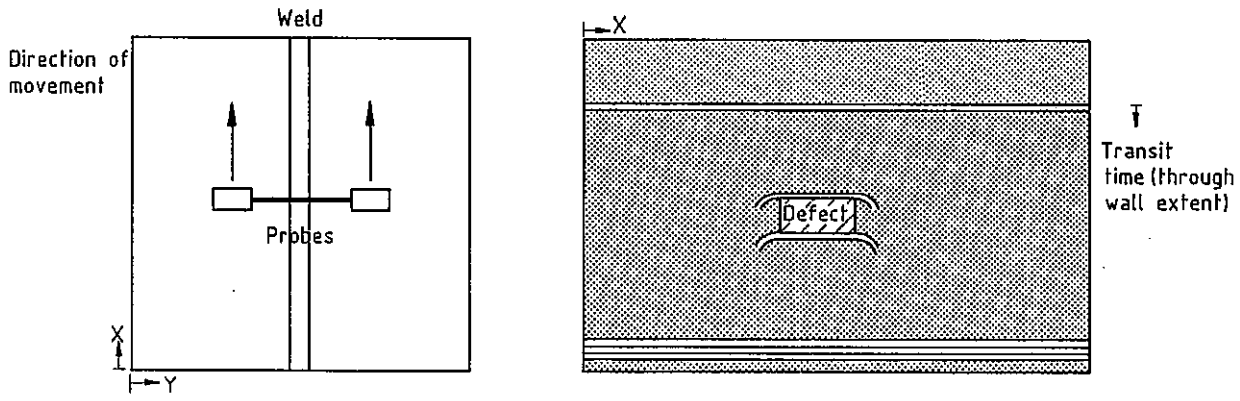

Figure 1. D-scan (probe movement normal to beam)

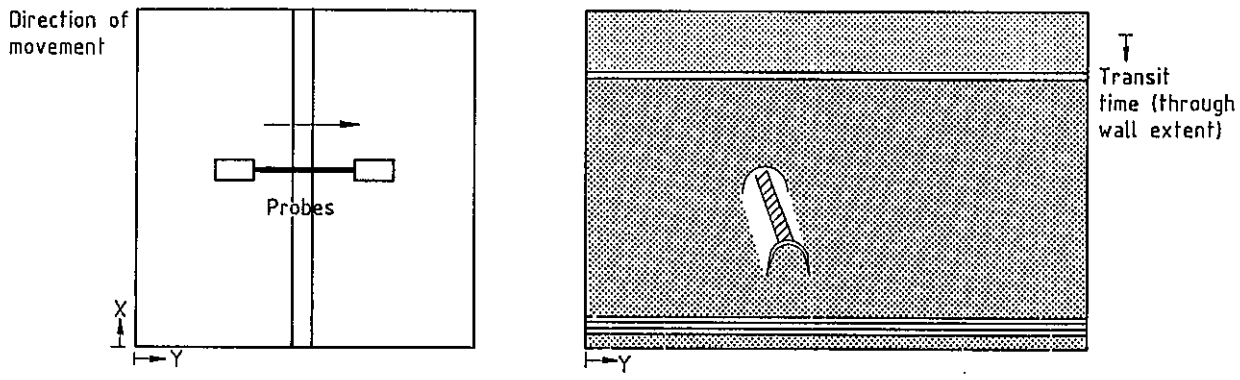

Figure 2. B-scan (probe movement in direction of beam)

2 References

2.1 Normative references

This British Standard incorporates, by reference, provisions from specific editions of other publications. These normative references are cited at the appropriate points in the text and the publications are listed on the inside back cover. Subsequent amendments to, or revisions of, any of these publications apply to this British Standard only when incorporated in it by updating or revision.

2.2 Informative references

This British Standard refers to other publications that provide information or guidance. Editions of these publications current at the time of issue of this standard are listed on the inside back cover, but reference should be made to the latest editions.

3 Definitions

For the purposes of this British Standard the definitions given in BS 3683 : Part 4 : 1985 apply, together with the following which are specific to the TOFD technique.

3.1 scanned surface

Surface on which the probes are placed or, in immersion testing, the surface through which the ultrasonic energy enters the specimen.

3.2 far surface

Opposite surface to the scanned surface.

3.3 flaw depth

Distance of the upper extremity of the flaw below the scanned surface.

3.4 flaw height

Distance between the upper and lower extremities of a flaw projected on to a through thickness plane.

3.5 D-scan

Scan that shows the data collected when scanning the probe pair normal to the direction of the beam along a weld or flaw. The D-scan is the usual representation at the flaw detection stage (see figure 1).

NOTE 1. This nomenclature has been used in this document but it should be noted that in the literature to date this distinction between B-scans and D-scans has not always been made in reporting TOFD data.

NOTE 2. These are also known as linear, non-parallel or longitudinal scans.

3.6 B-scan

Scan that shows the data collected when scanning the probe pair in the direction of the beam transversely across a weld or flaw (see figure 2).

NOTE 1. The B-scan may be used for more accurate location and sizing following the defect detection stage.

NOTE 2. These are also known as transverse, parallel or lateral scans.

3.7 upper flaw extremity

Flaw extremity or tip nearest the scanned surface.

3.8 lower flaw extremity

Flaw extremity or tip farthest from the scanned surface.

3.9 lateral wave

Wave that runs directly between two TOFD probes on a flat or convex surface.

3.10 creeping wave

Wave that runs between two TOFD probes on a flat or concave surface.

NOTE. The flat surface is an intermediate case and either lateral wave or creeping wave may be used.

3.11 back wall echo

Echo due to the wave reflected from the rear surface.

3.12 polarization

Shear waves can be polarized and in anisotropic materials the modes have different properties. The two modes are usually defined as:

a) the horizontally polarized (SH) mode;

b) the vertically polarized (SV) mode.

The polarization direction is defined with respect to the specimen surface at the transducer index point.

3.13 poly vinylidene fluoride (PVdF)

Polymer piezoelectric material entering service in ultrasonic transducers.

3.14 hard copy

Representation of a TOFD B-scan or D-scan on a permanent medium such as paper rather than on a computer or monitor screen.

3.15 transducer

Active element of the probe allowing the conversion of electrical energy into sound energy, and vice-versa.

3.16 probe

Electro-acoustical device, usually incorporating one or more transducers intended for transmission and/or reception of the ultrasonic waves.

3.17 insonification

Flooding of the area of interest with ultrasound.

标准分享网 www.bzfxw.com 免费下载

4 Principles of the method

4.1 When an ultrasonic wave interacts with a planar flaw it results in the production of diffracted waves from the tips of the flaw in addition to the normal reflected wave. This diffracted energy is emitted over a wide angular range and is assumed to originate at the extremities of the flaw.

The diffracted energy is well suited for flaw detection as signals may be recorded from a range of flaws of different orientations using a single probe pair.

It is also of use in flaw sizing since the spatial (or time) separation of the diffracted waves is directly related to the height of the flaw. Normally TOFD uses compressional waves as these arrive first, simplifying the interpretation of the responses.

4.2 The concept of a time of flight approach to the detection, location and sizing of flaws can thus be developed. Omitting mode conversion effects (for the sake of clarity) and introducing ray paths marking the limiting routes for the ultrasonic energy, the kind of experimental set-up to be used is indicated in figure 3a). Other equivalent test geometries are shown in figures 3b) and 3c).

4.3 Energy from the lower tip or extremity arrives at the receiver later than that from the upper tip and this extra time delay is a measure of the flaw height. Moreover the pulses of interest are normally preceded by a pulse due to the energy which runs along the specimen surface and are followed by a reflection from the back wall of the specimen (see figure 4).

In this way it is usually possible to obtain unambiguous extra information on the location of the flaw within the thickness of the specimen. The echo pattern depicted in figure 4 is simplified if the flaw breaks the upper surface, blocking the lateral wave.

4.4 It is assumed that the ultrasonic energy enters and leaves the specimen at fixed points under the probes and separated by a distance $2S$ (see figure 5). This is a simplification of the true situation but is sufficiently accurate for many purposes (see **11.4**). The time, T, taken for the ultrasonic energy to interact with a flaw tip at D and to return to the specimen is then given by:

$$CT = [d^2 + (S - X)^2]^{1/2} + [d^2 + (S + X)^2]^{1/2} \quad (1)$$

where

C is the ultrasonic velocity;

d is the depth of D below the specimen surface;

X is the displacement of the diffractor from the centre plane between the probes.

The value of T is a minimum when X is zero and in this simple case the expression becomes:

$$CT = 2\,[d^2 + S^2]^{1/2} \quad (2)$$

4.5 Commonly reference is made to the lateral wave response, i.e. the depths, d, of indications are calculated from the time-of-flight differences, T_D, between the lateral wave and the diffracted pulse. Hence:

$$d = \tfrac{1}{2}[T_D{}^2C^2 + 4T_DCS]^{1/2} \quad (3)$$

4.6 Equation (2) is used generally in the analysis of TOFD data and is thus of basic importance. The assumption that the flaw is positioned symmetrically between the probes introduces an error but, as is shown in clause **11**, this can be arranged to have little effect on the accuracy of the estimate of flaw depth.

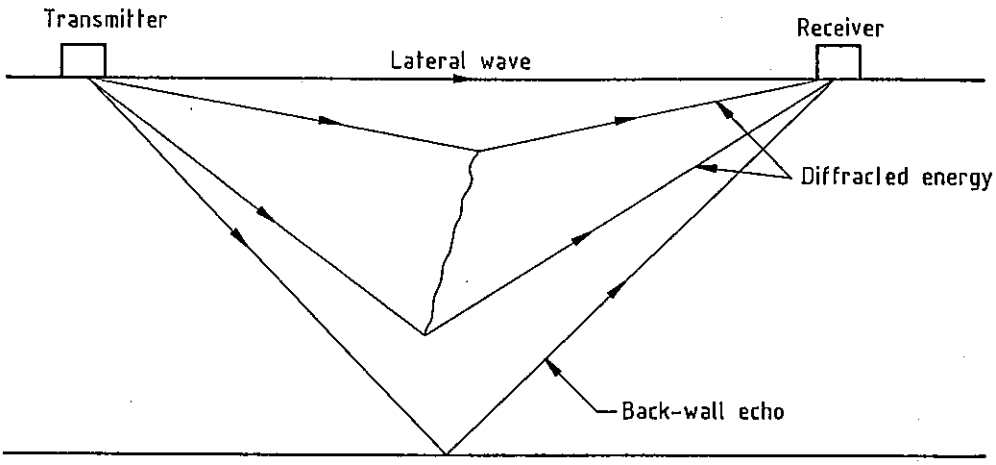

a) Flat specimen

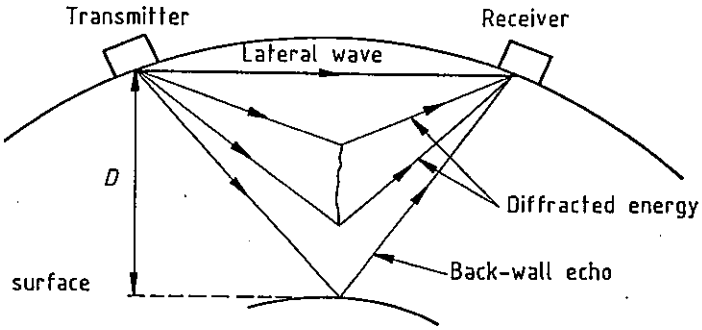

NOTE. Apparent depth *D* is less than the wall thickness.

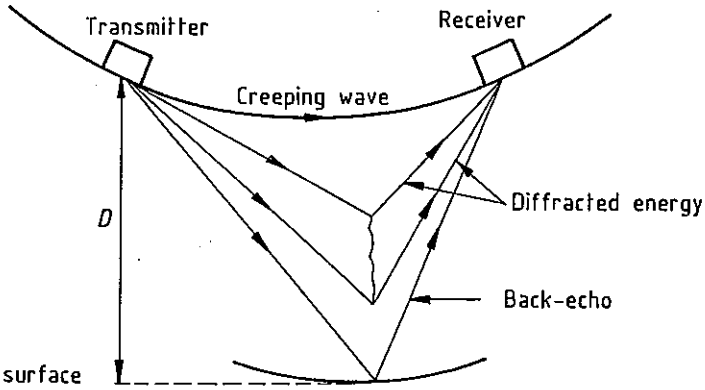

NOTE. Apparent depth *D* is greater than the wall thickness.

b) Curved specimens

Figure 3. Diffraction from a crack-like flaw

标准分享网 www.bzfxw.com 免费下载

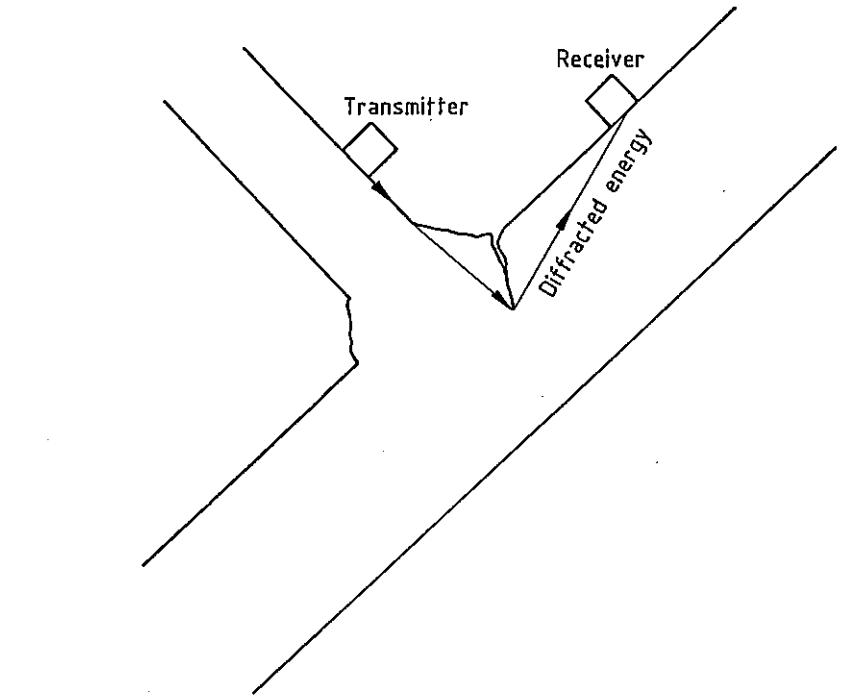

c) Complex geometries, e.g. T-joint

Figure 3. Diffraction from a crack-like flaw (*concluded*)

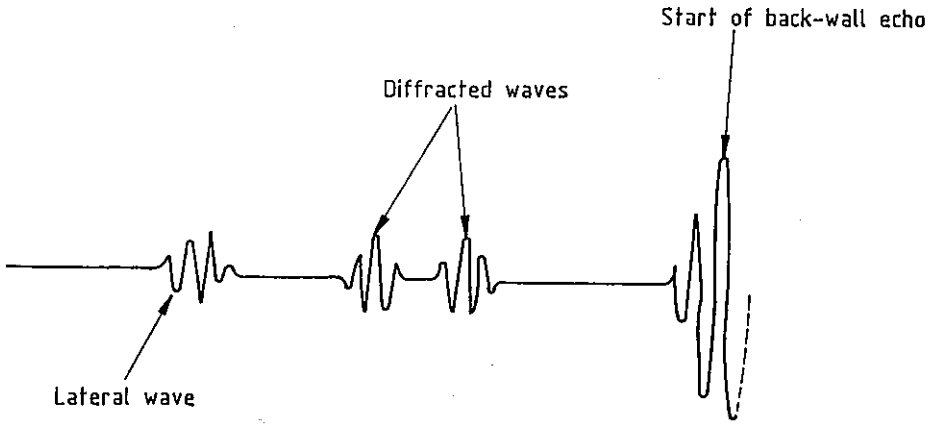

Figure 4. Typical pattern of pulses from an internal flaw

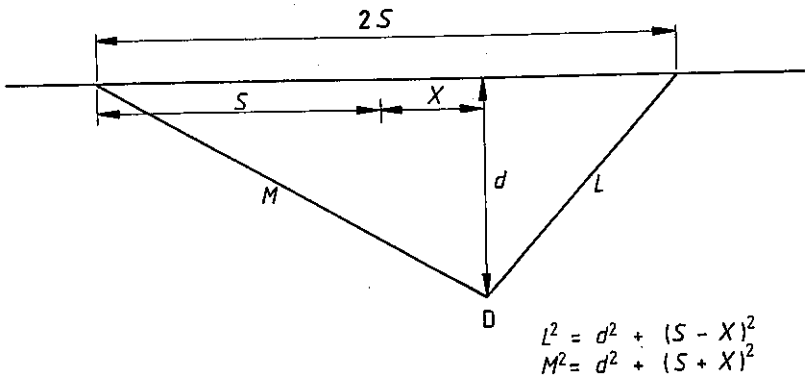

Figure 5. Generalized two probe testing geometry

5 Equipment

5.1 Electronics and data storage

5.1.1 In most circumstances an automatic data recording system is used. Manual and/or analogue equipment may be used for special applications. If additional benefit is to be obtained from post-inspection processing and if enhancement of data is required then use of a digital data recording system is necessary.

5.1.2 In order to achieve high quality repeatable results it is important to consider the pulser receiver electronics, the probes and connecting cabling. Important parameters for ensuring repeatability of testing include:

a) pulser pulse rise time;

b) pulser pulse amplitude;

c) pulser pulse width;

d) receiver lower, centre, and upper frequency limits;

e) probe centre frequency; duration of transmitted pulse; cable and probe impedance; cable length.

5.1.3 Experience suggests that although conventional spike pulsers can produce good results, a square wave pulser allows a finer control and tuning for TOFD applications. The following parameters are important.

a) A 200 V, 100 ns to 1.2 ps pulse width, which is suitable for the majority of applications.

b) If the pulser is unipolar, the pulse width should be the minimum with as rapid a rise-time as possible. A nominal unipolar pulse width of 100 ns or less is achievable. A rise-time of 50 ns or less should be specified.

c) If the pulser is bi-polar then the ideal pulse width is ¾ λ (typically 1 μs to 2 μs). The minimum pulse width is ¼ λ (typically 0.3 μs to 0.6 μs). The rise time should still be approximately 50 ns.

d) A broadband receiver bandwidth of 0.8 MHz to 30 MHz.

NOTE. A range of bandpass filters within this is useful in many circumstances.

5.1.4 Because the received signals are generally very weak when working with TOFD it is essential to have higher than normal gain available with suitable signal to noise ratio. The overall performance of the system should be adequate to achieve the gain settings detailed in **6.5**.

NOTE. A pre-amplifier may be desirable, particularly if long cables are required.

For automated systems best accuracy is achieved when the data samples are taken at equal spatial intervals. This can be achieved by synchronizing the movement of the scanning mechanism with the pulser receiver electronics/data recording system.

5.1.5 TOFD places strict requirements on the digitizing section of an automated recording system because errors in time measurement are crucial to the overall accuracy of the technique. A digitizer sample rate of 20 MHz to 25 MHz is adequate for the majority of applications. It is equally important to consider the time jitter of the sampling rate. This should be better than about 1 ns.

5.1.6 To interpret the TOFD data it is recommended that the observed signals are displayed as a B-scan or a D-scan (see figures 1 and 2). This may be done either as hard copy or on a monitor screen.

NOTE. A conventional flaw detector is not generally suitable for this inspection task but suitable commercial equipment is available. Advice on such equipment may be obtained from the British Institute of Non-destructive Testing[1].

5.1.7 A common form of the required display comprises an amplitude related grey or colour scale representation of a series of digitized A-scans, plotted adjacently to form the complete image as a B-scan or a D-scan.

Care should be taken that adequate grey/colour scales are available to image the signals of interest.

NOTE. Experience shows that 64 grey scales are recommended as a minimum, for general use.

[1] British Institute of Non-destructive Testing, 1 Spencer Parade, Northampton NN1 5AA.

标准分享网 www.bzfxw.com 免费下载

5.1.8 From these B-scans or D-scans the data that needs to be extracted includes:

a) the time delay of those echoes which may result from possible flaws;

b) the length and shape of these echoes;

c) the time delay of the lateral/creeping wave and back wall signals, if these are present.

While direct interpretation of the scans is possible it is normally essential that the data collected is archived in some agreed form.

5.2 Choice of ultrasonic probes

5.2.1 To obtain the utmost precision it is essential that the echoes have very good time resolution. Thus the use of unrectified pulses from short-pulsed transducers is recommended. The choice of probe is very application dependent and the following should be established:

a) type of wave mode needed;

b) timing resolution required;

c) achieving the optimum resolution, e.g. by high-frequency or by short-pulsed transducers;

d) effects of attenuation in the specimen;

e) efficiency required to give detectable echoes in the test material;

f) need for near-field operation;

g) required beam width.

NOTE. The choice of each of the parameters generally represents a compromise between resolution, signal-to-noise and gain-in-hand.

5.2.2 The usual choice of wave mode is the compressional wave since this has the highest velocity. Echoes thus arrive before competing mode-converted echoes, provided that the probe separation, as defined by the probe index points, is in excess of $2D$ where D is the thickness of the testpiece (or depth of interest). The normal shear wave (vertically polarized) should rarely be used in this search and size role but pilot studies in individual cases may establish its suitability. The use of the horizontally polarized shear wave may be essential for some highly textured materials provided that suitable transducers are available.

5.2.3 The resolution of the technique in any particular application can be estimated from the known pulse length and equation (1). In practice the simpler equation (2) is often employed, being sufficiently accurate to define resolution limits. As an example, consider resolution of echoes from near surface flaws from the lateral wave signal. From the pulse length the first point at which a second similar pulse can be recognized may be estimated, for example, if the arrival times are separated by more than two cycles. This may be translated into time, i.e. 0.4 μs for 5 MHz probes. If this value is substituted into equation (2) the minimum depth at which a flaw tip echo can be resolved may be estimated from the value of d. In other situations, such as the resolution of echoes close to the back wall echo, the time resolution defines the acceptable difference in the echo arrival times. Both arrival times are given by equation (2) with $d = D$ in the case of the back wall echo.

5.2.4 Improved resolution can be obtained by choosing higher-frequency probes or by selecting probes with short pulses. The former have a higher intrinsic precision but the latter are likely to be less affected by material attenuation.

5.2.5 The effects of attenuation and the probe power requirements are best evaluated on a representative test piece. It should be possible, using the desired equipment, to obtain a pulse from a representative flaw with an adequate signal-to-noise ratio. It should be recognized that such flaws are hard to simulate and, even if they can be detected and sized, may not demonstrate a similar capability for 'worst case' defects. The results depend on the test geometry as well as on the probe as is described in clause **6**. Signal averaging, if available in the equipment, may be used to improve the signal-to-noise ratio.

5.2.6 It is important to determine whether operation in the near field of the probes is necessary. This is the range up to a distance $a^2/4\lambda$ where a is the probe diameter and λ is the ultrasonic wavelength corresponding to the probe centre frequency. This is because the pulse shape is likely to change in the near field, affecting any assumption made concerning resolution. Again measurements on representative specimens are an acceptable means of evaluating this.

5.2.7 The beam width of the probe can affect the nature of the data collected. In general, in a search and detection role, the beam should be chosen so as to insonify the entire section of interest so that all flaws show up. Because of the refraction of the beam at the material surface and the common use of high beam angles, this is not usually difficult to achieve. As amplitude is not used quantitatively, the sole aim is to demonstrate a reasonable signal-to-noise ratio at the edge of the beam with sufficient sensitivity to detect all flaws of concern.

Specific inspections may allow the use of narrower beams, e.g. if only far surface-breaking flaws are sought. This increases the beam intensity and may allow less signal averaging to be used.

Focussed beams should *not* be used in searching for flaws because the region of the material insonified is too small to provide a guarantee of detection. However they can be used for flaw sizing where they may provide extra information on tip location.

5.2.8 For most inspection applications probes with centre frequencies between 2 MHz and 10 MHz and diameters of 6 mm to 20 mm are suitable. For general use, a 5 MHz broadband 12 mm diameter probe is recommended as the starting point for probe selection. Probe selection for a given inspection application should take into consideration the objectives of the inspection and material characteristics. Modifying the probe characteristics has the following effects:

a) *increasing frequency*:

1) shortens wavelength;

2) improves resolution;

3) shortens time duration of lateral wave;

4) decreases beam divergence;

5) increases near field length;

6) decreases penetration (higher attenuation);

7) increases acoustic grain scatter;

b) *decreasing frequency*:

1) increases wavelength;

2) decreases resolution;

3) increases time duration and intensity of lateral wave;

4) increases beam divergence;

5) decreases near field length;

6) increases penetration;

7) decreases acoustic grain scatter;

c) *decreasing probe diameter*:

1) decreases output;

2) increases beam divergence;

3) decreases near field length;

4) decreases contact area, emission point closer to front of wedge;

d) *increasing probe diameter*:

1) increases output;

2) decreases beam divergence;

3) increases near field length;

4) increases contact area.

5.2.9 BS 4331 : Parts 1 to 3 may be used as a guide to the selection and calibration of individual transducers.

NOTE. It should be noted that this standard applies to angled shear 'SV' wave probes rather than the angled compressional wave probes commonly used for TOFD.

6 Setting-up procedures for flaw detection

6.1 Basic considerations

6.1.1 Given a particular inspection task, the first point to consider is the optimum probe configuration. This controls both the accuracy of the technique and the signal-to-noise ratio.

6.1.2 The TOFD technique in the two probe form used for defect location and sizing is that shown in figure 3a. In this the geometry of the testpiece is represented as a simple flat plate. This is clearly directly relevant to the examination of butt welds not only in flat plate but also in pipes and vessels. For longitudinal welds in curved components the inspection geometry is different (see figure 3b) but the same basic approach can be used noting that:

a) the effective and true depths of flaws are different;

b) on convex surfaces the direct signal runs across a chord and the creeping wave may arrive later giving a longer dead zone.

These factors affect the choice of the transducer separation and frequency.

6.1.3 For other testpiece geometries the same basic principles hold and quite complex structures can be evaluated using two probe TOFD without any special modification (see figure 3c). Special consideration may be necessary for some geometries.

6.1.4 In general, the inspector has some control over the relative placement of the probes and over the choice of probe. Using these choices the task is to ensure that the pulses of interest are observable and that the inspection leads to a sufficient accuracy. This is developed in **6.1.5** to **6.1.8**.

6.1.5 The condition of the scan surface of the specimen may affect the precision of the results obtained. A good guide is that which would apply for conventional ultrasonics (see clause **8** of BS 3928 : Part 1). Thus machined, as-rolled or lightly corroded surfaces should all be suitable for the use of this technique. However pitted, heavily corroded or as-welded surfaces would normally give poor coupling over at least a part of the area to be scanned. Where scanning on the weld surface is required it is necessary to dress the weld cap.

标准分享网 www.bzfxw.com 免费下载

6.1.6 The condition of the far surface of the specimen is almost unimportant for this technique provided common sense limits are applied. Thus the distance of an extremity of the flaw might be located to an accuracy of better than 1 mm with respect to the scanned surface but this would not apply to its distance from the far surface if this were pitted. However the position of the back wall echo provides an accurate estimate of the local thickness of the specimen.

6.1.7 Flaws lying at a depth just beyond the far surface, e.g. in a projecting weld bead, are difficult to detect, locate and size until and if they extend into the main body of the specimen.

6.1.8 The presence of intentional far-surface irregularities such as counterbores or of unintentional flaws such as lack of root penetration does not affect the technique and indeed the penetration of these is quantified. Of course any flaw of a smaller height may be masked unless and until it propagates.

6.1.9 There are three basic objectives at this stage.

a) It has to be confirmed that the system has sufficient gain and signal-to-noise ratio to show up the echoes of interest, and that these can be identified with sufficient reliability (see **6.2** and **6.5**).

b) It is essential that the geometry of the probe pair is such that acceptable resolution can be achieved while maintaining adequate coverage (see **6.2**).

c) It has to be checked that the dynamic range of the system is used efficiently (see **6.5**).

6.1.10 From the description of the technique in clause **4** and equation (1) it can be seen that the accuracy achievable is affected by uncertainties in the timing precision, the probe separation and the parameter X which defines the asymmetry of the probe pair with respect to the flaw. The achievable precision can be estimated using equation (1) and for the defect detection role, under most circumstances, the dominant factor is the degree of uncertainty in X. In general all that is known is that the flaw echo probably arises from the weld or the heat affected zone.

6.1.11 By expanding equation (1) it can be shown that the relationship between X and the estimated flaw depth d is given by:

$$d^2 = (C^2T^2 - 4S^2)(0.25 - X^2/C^2T^2) \qquad (4)$$

where C, T and S are as defined in **4.4**.

The maximum possible estimate of depth occurs when it is assumed that $X = 0$. At this value equation (1) becomes identical to equation (2).

6.1.12 Depending on the nature of the specimen and the choice of probe it is normally possible to define X within certain limits. Thus the width of a weld and the heat affected zone usually places an upper limit on X. Similarly the lower edges of the beams may define a limit beyond which a flaw echo cannot be seen.

6.1.13 For example, if it is assumed that X does not exceed a value of 0.2 CT then it is possible to define the maximum and minimum possible depths, d_{max} and d_{min}, for any given observed delay time:

$$d^2_{max} = 0.25C^2T^2 - S^2 \qquad (5)$$

$$d^2_{min} = 0.84(0.25C^2T^2 - S^2) = 0.84d^2_{max} \qquad (6)$$

In order to make the variation in X relatively small there are advantages in employing quite large probe separations, which makes CT larger. Care has to be taken either to eliminate or to recognize mode converted echoes but probe separations as high as four times the specimen thickness may be worthy of evaluation (see **6.2**).

6.1.14 In the example in **6.1.13** there is an 8 % variation in the possible depth. The difference may be great enough for the echo from a flaw off the centre line to be masked by the back wall and this has to be taken into account when quoting figures for the minimum flaw size detectable.

In the majority of cases, the error in determining the depth of the flaw is small so that TOFD, even when used in the search/sizing role, is usually more accurate than other ultrasonic techniques for determining the size of the flaw.

6.2 Choice of probe separation

6.2.1 Equation (1) shows that the resolution of the system should be optimized as the transducer separation ($2S$), defined by the index points, approaches zero. At the same time account has to be taken of the variation in the efficiency of diffraction from a near-vertical planar flaw and the variation in the loss of energy due to the implied testing range. Taken together it is usually found that the optimum efficiency occurs for beam angles in the range from 55° to 65° excluding attenuation factors. Finally, as detailed in **6.1.9** to **6.1.14**, it may be desirable to increase the probe separation to improve the detectability of flaws close to the back wall.

6.2.2 Once a test geometry has been decided upon it is necessary to estimate the likely errors and limitations in the measurement. The first step in this is to use equation (4) as described in **6.1.11**.

If the error from this source is small, e.g. less than 1.5 mm, it is possible that one of the other sources of error discussed in clause **11** is more significant and this should be quickly checked.

6.2.3 The resolution of the technique depends on the ability to determine the presence of flaw echoes in the presence of the back wall echo and the lateral or creeping wave. Generally, in the former case a small signal is sought against the background of a much larger signal and it is advisable to assume that the start of the pulses should be separated by between one and two wavelengths. In the latter case the lateral or creeping wave echo arrives before the echo of interest and, again, it is likely that a number of cycles elapses before it is possible to be certain that the flaw echo is recognized. In both cases the effective dead time should be fed into equation (1) to determine the limits of resolution.

6.2.4 It should be noted that the resolution of near surface flaws is improved if the probes are brought closer together. Alternatively the resolution of flaws near the back wall is only improved if the flaws are close to the probe centre line. For other flaws, resolution may be aided by increasing the probe separation. Some compromise is necessary.

6.2.5 If the resolution still appears to be too poor there are other options which may be worthy of evaluation:

a) the use of probes with a shorter pulse;

b) the use of special analysis techniques to remove the lateral or creeping wave;

c) the use of higher frequency transducers;

d) the use of one or more of the special techniques described in annex A.

6.2.6 Probe separation should be selected to:

a) optimize insonification of the area of interest;

b) ensure adequate diffracted energy from crack tips is obtained;

c) maintain acceptable resolution.

6.2.7 Optimum probe separation for insonification purposes is a wide separation. Optimum probe separation for resolving purposes is a close separation. Optimum theoretical probe separation for detection of diffracted signals from vertically oriented planar flaws is a 120° included angle of the probe beam axes at the flaw tip. Attenuation, however, scatters energy to the extent where the optimum amplitude of diffracted energy from flaw tips is obtained where the included angle is less than this. Attainable probe separation may be limited by testpiece geometry.

6.2.8 A probe separation setting to focus the probes at two-thirds of the material thickness with an included angle of 110° is recommended as a starting point, but other factors may require this to be modified to suit inspection requirements. The precise angle used is not normally a critical factor.

It may be found that one probe set-up may not be adequate to fulfil all inspection requirements. Scanning with more than one probe separation may be required if adequate coverage cannot be achieved with a single scan.

6.3 Probe angle

6.3.1 The probe angle should be determined after the probe separation has been established. The criteria for probe angle selection are to direct the beam towards the area of interest. Typical nominal probe angles are 35°, 45°, 60° and 70° from normal. The higher probe angles tend to give rise to lateral waves of higher intensity, making it more difficult to recognize near surface flaws. A knowledge of the precise beam angle is not necessary for TOFD inspection. Variations of ±5° from nominal do not affect the quality of inspection by any appreciable amount.

6.3.2 The objective is to direct the sound towards the area of interest, i.e. if the inspection goal is to detect far surface breaking cracks only, the probe separation should be selected to provide an included angle of 110° at the far surface and the probe angle should be selected to direct the energy towards the focal point at the far surface. Where inspection coverage in the through-wall plane is to be maximized, the focal point should be at two-thirds of the wall thickness with a probe in the range between 45° and 60°. 60° probes are more suited to heavy wall materials where the (weaker) upper edge of a 45° beam may be attenuated by the long transit paths involved.

6.3.3 Thinner wall materials with a large weld cap width to material thickness ratio may necessitate a wider probe separation than the optimum. In this case the probe angle is increased to compensate for the increased separation. Angles higher than 60° are rarely necessary on thin wall materials as the intensity of the lateral wave increases to unacceptably high values.

6.4 Inspection resolution

6.4.1 Inspection resolution directly affects the choice of probe separation and pulse shape. It is important to control the pulse shape as this affects resolving power in the near surface region (duration of the lateral wave) and the ability to separate two signals whose arrival times are spatially closely separated.

标准分享网 www.bzfxw.com 免费下载

6.4.2 Critically damped probes are commercially available with sufficient output to cover most inspection applications. The transmitted waveform should consist of a pulse containing a small number of predominant half cycles. Half cycles at the leading and trailing edges of the pulse should not be greater than −6 dB from the amplitude of the predominant half cycles. The factors influencing pulse shape are:

a) transducer damping;

b) amplifier bandpass selection;

c) pulser characteristics.

These variables should be adjusted to provide a symmetrical pulse shape with not more than four predominant half cycles.

6.4.3 It is equally important to define the spatial resolution of flaws in the scanning direction. As with pulse echo techniques the echo is observable over a distance greater than the length of the flaw, the extra length being approximately equal to the beam width. Flaws separated by more than the beam width should thus be readily resolved. However TOFD introduces another dimension because the apparent range of the echoes increases as the probes move away from the flaw, giving the characteristic arc shape to the B-scan image from point-like reflectors for instance. This means that echoes which overlap spatially are commonly resolved in the time dimension. Effective resolution may thus be available at separations much less than the beam width and, if high resolution is important, this should be evaluated in a simulation of the appropriate test geometry.

6.5 Choice of appropriate gain settings

6.5.1 It is most important to bear in mind that echo amplitude is not used quantitively by this technique for the determination of flaw size. The normal amplitude-based calibrations associated with ultrasonics are thus largely invalid when this technique is used and should not be specified.

6.5.2 Diffracted signals are often of lower amplitude than reflected signals. Sufficient gain should be utilized to ensure that the diffracted echoes show up on the record.

Experience shows that the amplitude of diffracted signals generated at crack tips is dependent on various factors such as compressive forces on the crack face, crack orientation with respect to the probes, the nature of the crack tip itself and the general noisiness of the material, and each of these factors often means that higher gain is required.

6.5.3 There are four recommended methods of establishing inspection gain settings:

a) representative flaw sample;

b) diffracted signals from slits;

c) reflected signals from cross drilled holes;

d) grain noise.

6.5.4 It should be noted that artificial reflectors respond differently to real flaws. For TOFD there is generally no direct correlation between the amplitude of the signal and the severity of the flaw. The use of artificial reflectors should be restricted to:

a) verification of the distribution of energy within the specimen;

b) a means of reproducing inspection sensitivities;

c) demonstrating inspection resolution.

6.5.5 Whichever method is chosen for establishing inspection gain settings, calibration records should be maintained of signal waveforms, prior to and after each inspection. The calibration scans may be performed dynamically or statically, by recording one or more waveforms. These provide the following information:

a) a permanent and traceable record of gain settings; signal-to-noise ratio and pulse characteristics;

b) evidence of system stability;

c) ease of reproducibility;

d) evidence of probe separation drift.

6.5.6 If the specimen used for calibration purposes does not match the testpiece ultrasonically it is necessary to take attenuation factors into account. Attenuation effects may be ascertained by comparing back wall echoes or the amplitudes of lateral wave signals.

6.5.7 Attainable distribution of energy and frequency content of the beam may necessitate the use of two or more probe configurations if the distribution of ultrasonic energy throughout the material varies with depth to the extent that flaw indications may not be resolved. The wedge angles, probe centre separations, system bandwidth and amplifier characteristics all influence the distribution of energy in terms of amplitude and frequency content. Verification of adequate coverage can be achieved by either referring to the calibration scans taken on artificial flaws or by observing grain noise throughout the region of interest.

6.6 Gain setting using representative flaw sample

Where a specific flaw type requires detection there is nothing better than a representative flaw sample to determine the appropriate gain setting. It should be taken into consideration in the interpretation that no two flaws respond in exactly the same manner. The observed signal height from a known flaw is not used quantitively in the analysis of the data.

6.7 Gain setting using diffracted signals from slits or notches

6.7.1 Artificial diffractors in the form of electro-discharge machined (EDM) slits or 'V' notches can provide a suitable means of determining appropriate gain settings (see figure 6). For EDM slits it is recommended that the maximum slit width should be no greater than one-quarter of the ultrasonic wavelength to be used. Ideally calibration blocks(s) should be constructed with a thickness equal to that of the inspection task in hand and of a similar material.

6.7.2 Where a single probe spacing is to be used, it is recommended that the calibration slit or notch is machined to a maximum depth equal to one-half of the block thickness. Where multiple probe spacings are envisaged, it is recommended that a series of calibration notches be produced with maximum depths at the point of intersection of beam axes for each individual probe spacing.

6.7.3 To calibrate gain settings, the probe pair is positioned symmetrically on either side of the notch such that a diffracted signal is obtained from the notch tip. It should be noted that this requires the notch to be open to the near surface rather than the far surface. If the latter case were used the signal would contain an unwanted reflected component in addition to the diffracted signal. Using an unrectified A-scan display, the system gain may be adjusted such that the diffracted signal from the notch has an appropriate peak to peak amplitude (e.g. 80 % full screen height) and this should be recorded.

6.8 Gain setting using side-drilled holes

6.8.1 Calibration using the maximized response of a TOFD probe pair arrangement from a standard reflector offers several advantages over the alternative, more empirical methods given in **6.6**, **6.7** and **6.9**.

a) The inspection sensitivities used in different inspections may be compared.

b) Theoretical predictions of scattering from the standard reflector may be related to that from an idealized smooth, straight-edged flaw. It is therefore possible to demonstrate that the responses of such flaws are not swamped by the noise levels encountered in an inspection, i.e. that sufficient sensitivity has been achieved for reliable detection of such flaws.

c) The reflectors may be introduced into the test block at a range of different depths, allowing both the distribution of energy within the specimen and the inspection resolution to be assessed.

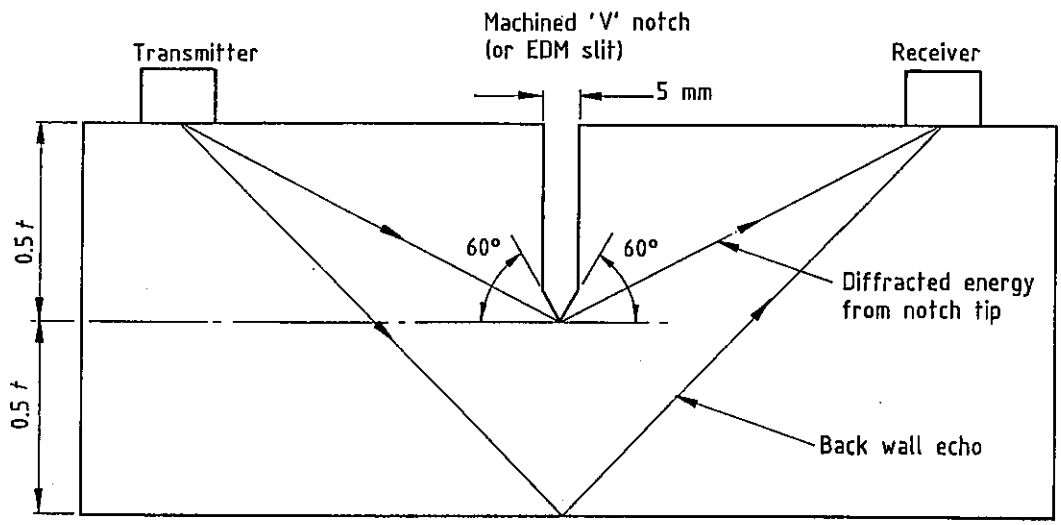

NOTE. Notch (or slit) has to be open to near surface as illustrated.

Figure 6. Calibration block for TOFD using V notch or electrodischarge machined slit

标准分享网 www.bzfxw.com 免费下载

6.8.2 This method of calibration, based on side-drilled hole responses, may be used to supplement another method of gain setting (e.g. as described in **6.6**, **6.7** or **6.9**), whenever a theoretical assessment of detection capability is perceived to be of value.

Side-drilled holes give more reproducible signals than flat-bottomed holes, for which the signal amplitude may depend critically on orientation.

Care should be taken if side-drilled holes of diameter less than twice the inspection wavelength are used, as interference may occur between the signals scattered at the top and bottom of the holes.

6.8.3 Side-drilled holes generally give much stronger signals than diffraction at the edges of flaws. It follows that calibration using side-drilled holes often includes the following steps.

a) Measurement of the peak signal amplitude from the side-drilled hole for the TOFD probe configuration being calibrated, e.g. record the gain needed for ± 80 % full-screen height, called the calibration gain.

b) Addition of a gain correction, typically between 15 dB and 30 dB, to the calibration gain to give the gain required for flaw detection scans. This is to take account of the difference in response from the flaws of concern and the side-drilled hole.

For this method of gain setting to be reliable, the system should have sufficient gain linearity (typically should be accurate to ± 3 dB) over the range of gain values used in calibration and during testing.

6.8.4 The calibration measurements should generally be repeated on completion of each probe scan, to demonstrate that there has been no significant change in the performance of the system.

As for the other methods of gain setting, differences between the calibration block and test component may be significant and where necessary steps should be taken to take these changes into account.

6.9 Gain setting using grain noise

6.9.1 It may not be relevant (or practical) to employ calibration blocks with slits, side-drilled holes or representative flawed samples suitable for the inspection task in hand. An alternative method of establishing gain settings is to display acoustic scatter at grain boundaries. Diffracted signals can be imaged using a grey scale imaging system where the diffracted signal is no greater in amplitude than the grain scatter by observing signal patterns, i.e. signal patterns which significantly disturb the general background mottling of the material grain scatter are detectable. It is important when using this method of choosing gain settings to control by procedure optimum calibration parameters and to maintain calibration records.

6.9.2 The recommended method is to place the probe pair on a suitable calibration block such as the side face of a standard A2 block conforming to BS 2704 : 1978 with the probe separation set for subsequent inspection and to display the lateral wave and compression back wall reflection. The equipment settings should be adjusted to provide the optimal pulse shape with maximum signal-to-noise ratio. The gain should be adjusted such that acoustic grain scatter is discernible on the digitizer scale over the region of interest. The amplitude of electronic noise prior to the arrival of the lateral wave should be at least 6 dB below the amplitude of the grain noise (see figure 7).

Care should be taken where grain structures are expected to be abnormally coarse, such as electro-slag or heavy wall submerged arc welding.

6.9.3 Where material thicknesses of items to be inspected are significantly thicker than the A2 calibration block, samples of parent plate material similar to the item to be inspected may be used. In the absence of the availability of suitable calibration blocks, setting up may be performed on areas of clean, parent plate or pipe adjacent to the weld(s) to be inspected.

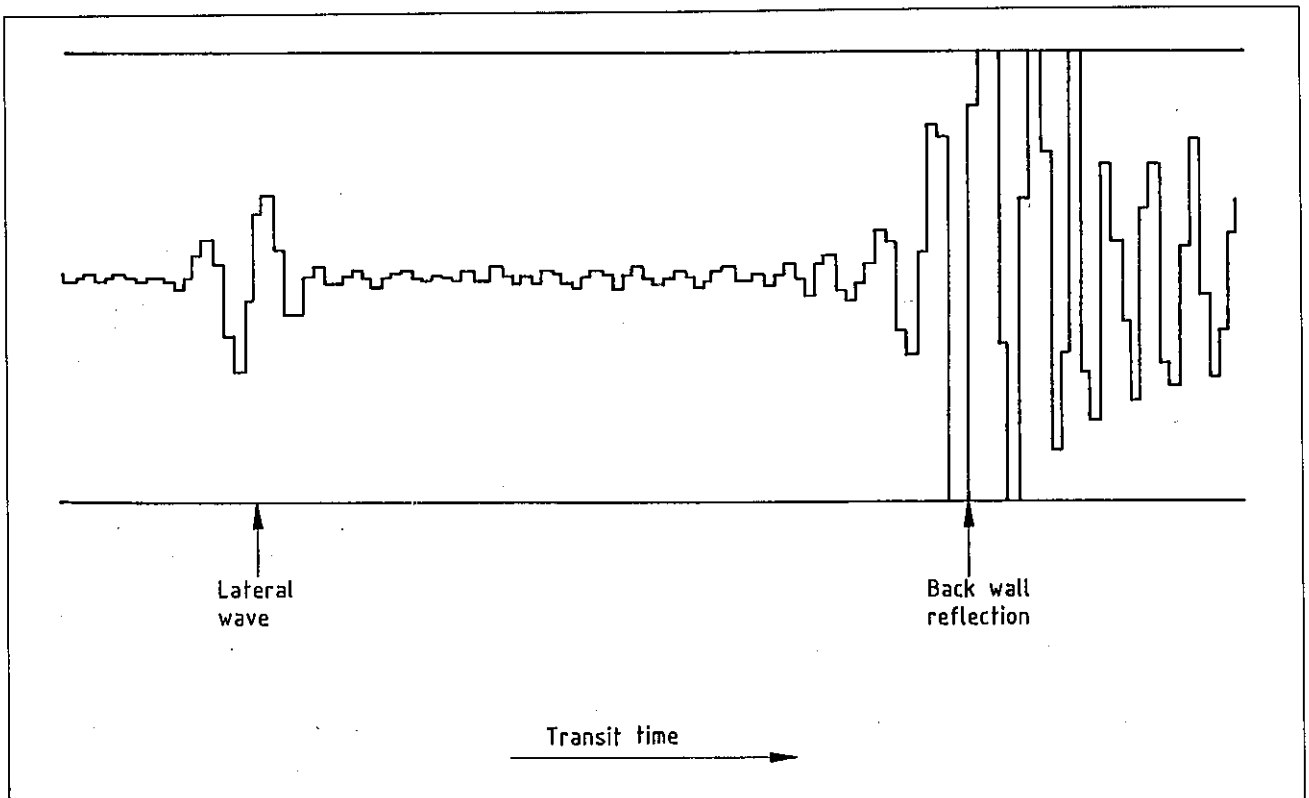

Figure 7. Gain setting using grain noise

6.10 Choice of digitizer settings

6.10.1 The recording equipment generally employs a digitizer which records amplitude data at regular intervals, for example with a cycle time of 20 MHz. It is vital that this should be fast enough to record the pulses from the system but not so fast as to reduce the effective range of measurement.

6.10.2 If the digitization rate is too low, the recorded pulse shape is distorted. A good guide is to employ probes of frequency only up to one-quarter of the digitization rate.

This setting is rather lower than the theoretical limit but is easy to remember and gives a wide range of operation. The ultrasonic echoes are usually obtained from probes with frequencies in the range from 1 MHz to 10 MHz and these pulses have to be faithfully recorded.

6.10.3 The use of higher digitization rates than essential does not harm the measurements and gives rise to a better picture of the true pulse shape. It should be noted however that there is generally a limit to the effective range of the measurement, i.e. the product of the digitization rate and the number of digitized records (often 512) which the equipment can store. It should be confirmed that the resulting range is sufficient for the measurement in hand.

6.11 Summary

The achievable precision of the technique, the extent of any dead zone and the gain required in the system should be demonstrated. These parameters are affected by the depth and range of the flaws and by the shape of the flaw edge. Thus it is suggested that the test blocks should contain slits cut from the scanning surface to varying depths of say 2 mm, 4 mm, 8 mm, 15 mm and 30 mm. The achievable precision, dead zone and gain required are all affected by differences in signal amplitude between the slits and real flaws. Specific tasks may require that this range be extended. A single stepped slit may suffice rather than a number of separate specimens.

标准分享网 www.bzfxw.com 免费下载

7 Interpretation of the data

NOTE. A flow chart detailing the suggested steps towards the characterization of flaw echoes in TOFD is given in annex C. Some typical scans are shown in annex D.

7.1 General

7.1.1 As a general rule data interpretation is required immediately after the flaw detection stage. However the items in this clause are also valid in association with accurate flaw sizing, particularly if TOFD is only introduced at the flaw sizing stage.

Reporting criteria should be decided prior to the inspection.

Acceptance criteria should be established in relation to the particular application prior to the inspection. TOFD data may be evaluated and compared against existing codes such as BS 5500 or ASME XI.

In addition, to demonstrate that there have been no problems during collection of the inspection data, e.g. a loss of coupling, a reference signal such as the lateral wave or back-wall echo should be monitored during each scan.

7.1.2 It is possible to distinguish between defects and less serious flaws in a number of ways and the aim is to eliminate as many of the latter as possible consistent with a safe interpretation of the record. In doubtful cases the more serious interpretation of the flaw should always be assumed.

7.1.3 Usually the most common reflector observed is that of small pores or small pieces of slag. These produce a characteristic arc-shaped record which may lie at any depth. Data processing techniques may be used to aid in the interpretation of signals. Normally it is not necessary to report these flaws, but associations of such flaws may be reportable in some instances.

NOTE. This is a straightforward procedure with mechanized or calibrated hand scanning but there is a length uncertainty with free hand scanning and the possible effects of this have to be considered in defining any flaw rejection criteria.

7.1.4 No ultrasonic technique fully characterizes the reflectors detected but it is often possible to group flaws into types using the procedure described in **7.1.5** to **7.7**. More detailed forms of TOFD or complementary pulse echo ultrasonic inspection may be used to improve these assessments in critical cases. A pessimistic assessment should always be made in doubtful cases (see **7.6** and annex C).

7.1.5 The following categories of flaw are recognized.

a) *Planar flaws*. Flaws in this category include cracks, lack of fusion, etc. Ultrasonic techniques are not expected to distinguish perfectly between the flaws in this class.

b) *Volumetric flaws*. Internal volumetric flaws with depth comprise a general category which includes volumetric flaws such as lack of penetration, larger slag lines, etc.

c) *Thread-like flaws*. Flaws in this category include flaws with significant length but little through wall extent, typically < 3 mm. In a TOFD search the same type of echo may be observed from long, narrow lamellar flaws and from near horizontal areas of lack of fusion.

d) *Point flaws*. Flaws in this category include pores, small pieces of slag, etc. They are usually the most common feature and are not usually reportable.

e) *Uncategorized flaws*.

7.2 Planar flaws

7.2.1 Planar flaws open to the near surface show up as an echo from the bottom edge of the flaw usually accompanied by a loss or a weakening of the lateral wave signal. The phase is similar to that of the lateral wave signal.

The detection limit and accuracy and resolution are given by equation (1).

7.2.2 The main cause of false indications of this type is from probe lift-off which, by increasing the coupling thickness, makes a record similar to that from a planar flaw open to the surface. A check should be made for a similar movement in the back wall echo(es).

NOTE. The lateral wave may not always be blocked by these flaws.

A cross check for doubtful indications may be based on high angled 'creeping wave' probes. Eddy current inspection or the use of magnetic particle inspection may also be considered.

7.2.3 Planar flaws breaking the far surface show up as an echo from the top edge (opposite phase to the above) probably accompanied by an increasing delay in and/or weakening of the back wall echo. The phase is similar to that of the back wall echo.

NOTE. A scan at reduced gain may be essential to see the phase of the back wall echo properly.

The detection limit and accuracy are given by equation (1). This also defines the resolution needed to observe the echo in front of the back wall echo.

7.2.4 If the flaw is not close to the centre line of the probe pair, the penetration (from the back wall) is underestimated. This should be considered in flaw assessment and more accurate flaw sizing carried out in limiting cases (see clauses **10** and **11**).

The main cause of false indications of this type is echoes from large pores or from slag lines near the back wall. These have many of the characteristics of echoes from planar flaws (although the echo height is usually untypically large) and may be difficult to eliminate with certainty.

Where the interpretation is doubtful a rapid pulse echo ultrasonic check is possible by looking directly for the implied corner echo and creeping wave echo (see clause **10**).

7.2.5 Internal planar flaws show up as two echoes often with a distinct phase change between the echoes from the upper and lower tips. The phase of the upper tip echo should resemble that of the back wall echo.

NOTE. The signal amplitudes are substantially reduced.

The phase of the lower tip echo should resemble that of the lateral wave.

The detection limit is given by equation (1) on the assumption of sufficient resolution to observe the echoes from both tips. This can be assumed to be unaffected by the lateral position of the flaw.

The accuracy and resolution are given by equation (1). Normally the resolution is good because the echoes are well away from the lateral/creeping wave and the back wall. Care may be needed if the material contains many reflectors.

7.2.6 If the flaw is not close to the centre line between the probes there is some error in estimating height and a greater error in estimating the depth within the specimen. If the flaw severity is close to the acceptance limit the accurate flaw sizing procedure (see clause **11**) should be employed.

7.2.7 Common sources of false indications of this type are internal volumetric flaws. Very occasionally chance associations of slag lines mimic the upper and lower tip echoes from a planar flaw. Usually volumetric flaws are identified by the very disparate sizes of the upper and lower tip echoes. Chance associations of slag lines normally lack the clear phase reversal observed with upper and lower flaw tip echoes.

These indicators may not be clear, for instance if the flaw has a jagged outline. For this reason a conservative interpretation should be used.

Where the interpretation is doubtful a rapid ultrasonic check is possible by looking directly for the echo from the implied planar reflector.

7.2.8 Internal planar flaws near the scanned surface may need separate identification because acceptance codes often require that they be treated as though they were open to the scanned surface. The limits should be governed by the agreed code or procedure.

The assumption that they behave as surface breaking flaws often precludes the absolute need to resolve the *upper* tip echo where it is masked by the lateral wave. Then only the depth of the lower tip should be resolved.

Confirmation with the more accurate form of TOFD is likely to be necessary (see clause **9**).

7.2.9 Internal planar flaws near the far surface may need separate identification because they may need to be treated as though they were open to the far surface. This is governed by the agreed inspection code or procedure.

The assumption that they behave as surface breaking flaws often precludes the need to resolve the *lower* tip echo, which might be close to the back wall echo. Then only the depth of the upper tip should be resolved.

Some flaws may be undersized if located near weld edges (larger values of X in equation (1)). Confirmation with the more accurate form of TOFD measurement is likely to be necessary (see clause **11**).

7.3 Volumetric flaws

7.3.1 Echoes from reflectors of this type also show the features and phases outlined for internal planar flaws, but the echo from the upper surface is usually considerably greater than that diffracted around the lower surface.

Because of the danger of confusing these flaws with planar flaws it may be necessary to define stringent selection rules which may need to be revised according to the types of flaw suspected to be present.

7.3.2 Other flaws are considered to be planar and, if of a critical size, should be examined in more detail. Characterization is basically a matter of distinguishing between a presumed planar reflector and a volumetric reflector and as a supporting technique an ultrasonic pulse echo test may help to make this distinction as indicated in clause **10**.

7.4 Thread-like flaws

7.4.1 The reflector appears as an apparent upper edge echo (approximately in phase with the back wall echo) with no corresponding lower edge echo. There is expected to be a phase difference between these flaw echoes and the tip of a planar flaw but this is unlikely to be resolved by eye. The echo may be distorted and/or the pulse length increased if the top and bottom signals are almost resolved.

标准分享网 www.bzfxw.com 免费下载

The limit of resolution is given by equation (1) assuming a time resolution just sufficient to resolve two flaw echoes. Often these flaws do not need to be reported and the alternatives are also not reportable but this should be defined prior to the inspection.

7.4.2 Broken lines of slag may also be observed and there is a tendency for small slag flaws to align themselves. This gives a range of flaw responses. This special category of flaws is only reportable in inspections in which thread-like flaws are defined as reportable. In these cases some criterion for the classification and reporting of broken flaws should also be agreed.

7.5 Point flaws

These echoes have similar pulse characteristics to volumetric or thread-like flaws but have no resolvable length.

NOTE. Where free hand scanning is used there are occasions where the arc produced by these echoes in the D-scan is under or over sized. The first case is easily recognized but the second may result in a mimic of a more serious flaw. It may be desirable to define a minimum length of interest for volumetric or thread-like flaws. Planar flaws open to the far surface may also be mimicked and should be eliminated as indicated in clause **10**.

7.6 Uncategorized flaws

It may be found that some flaws are not neatly categorized by the examination. These may, for instance, be due to cracks with jagged profiles, internal contact points or complex form. As far as the categorization is concerned the reflectors are likely to be of two types.

a) Reflectors which are not interpretable by eye.

b) Reflectors which are provisionally entered in a more serious category such as planar for volumetric, continuous for broken, etc.

Uncategorized type a) reflectors should be treated as cracks until subsidiary, more detailed examinations have been carried out.

Uncategorized type b) reflectors should remain in the more serious category until this is confirmed or refuted by subsequent examination.

7.7 Back wall features

7.7.1 Normally the back wall echo is a fairly simple feature but it may be found to split into two or more components. As an example the presence of a weld bead gives rise to two or three good reflectors (back wall of the plates and the weld bead) at different ranges. Similarly offset butt welds and undercut produce a split back wall echo.

Sometimes these features are reportable if they exceed a predefined limit. In this case the TOFD technique results in a continuous record of, for example, the degree of offset around a weld.

7.7.2 A difficulty is that these split features might be interpreted as flaws penetrating from the far surface.

In interpretation the following sources of back wall echo splitting should be considered.

a) Does it result from the component design? Examples are weld beads, planned offset.

b) Could it have arisen from the component manufacture? An example is unplanned offset; is this suspected (from the position of the outer surfaces for instance)?

c) Are both echoes broadly comparable in height with the normal back wall echo? This is unlikely if a crack tip is causing one of the echoes.

7.7.3 Flaws such as lack of root penetration or undercut remain possible and are reportable.

8 Estimation of flaw dimensions after flaw detection

8.1 The relationship between the observed delay time of an echo and its depth in the specimen is given by equation (1). An estimate of the value of the parameter X (see **6.1.10** to **6.1.13**) may be required.

8.2 The majority of equipment used for TOFD has some facility for automatically defining the depth of selected echoes. A common facility is the use of a cursor to select echo positions from which the corresponding time delay, or more usually the actual depth of the echo, is determined using equation (1) or equation (4).

8.3 The depths of the top and bottom echoes from a flaw directly define its height.

Echoes diffracted or reflected from the top of a flaw are approximately of the same phase as the back wall echo (in fact there is a phase difference of about 45° but this is difficult to detect by eye). These are defined as reflected echoes.

Echoes diffracted around the bottom of a flaw are of the opposite phase to this and are approximately the same phase as the lateral wave. There are defined as transmitted echoes.

8.4 In defining the depth of particular echoes this change of phase should be allowed for. Thus if the first positive excursion of the pulse is selected as a timing reference on reflected echoes, the first negative excursion should be selected on transmitted echoes. The actual choice of reference is not important provided that it is used consistently. Particular care should be exercised when echoes of widely varying amplitude are present to ensure that the correct cycle is chosen (the number of cycles observed by eye on the record or print out may depend on the amplitude of the echo).

8.5 Because the back wall echo is usually *much* larger it may be difficult to select an equivalent cycle to that chosen for the other signals. This can be resolved at the calibration stage by reducing the gain and studying the record of the back wall echo at an amplitude similar to the normal amplitude of the diffracted echoes.

8.6 An alternative means of estimating flaw depth and height is to linearize the entire D-scan so that the y-axis is proportional to depth rather than time. This facility allows depths and heights to be read off directly and is available on the majority of equipment used for TOFD. It has one limitation which is that the shallower echoes are spread out which makes recognition less reliable.

8.7 The estimation of the length of a flaw is made directly from the length of its record on the D-scan. In common with all ultrasonic techniques this record is likely to be elongated because of the finite width of the ultrasonic beam. The correction for this can be made by using the appropriate sizing techniques detailed in BS 3923 : Part 1 : 1986.

8.8 A more accurate method is to make use of the change in the apparent range of the echo as the transducer pair moves away from the flaw. This variation can be closely defined mathematically and equipment used for TOFD often has calibrated cursors which can estimate the consequent shape of the record. By fitting this cursor to the record more accurate estimates of flaw length can be obtained.

8.9 An alternative method is to use the synthetic aperture focussing technique (SAFT) to perform a linear focussing of the D-scan record and minimize the overestimation of length in this way. The user normally chooses between this approach and the cursor method described in **8.8**. Both are usually available on TOFD equipment and the final choice is likely to be based on speed of operation. SAFT, particularly modern iterative SAFT procedures, is favoured when there are many possible flaws to be analysed.

NOTE. Additional information on SAFT is given in *Review and discussion of the development of the synthetic aperture focussing technique for ultrasonic testing* [1], *An introduction to the concepts and hardware used for ultrasonic time-of-flight data collection and analysis* [2], and *Experience with the time-of-flight diffraction technique* [3].

9 Setting-up procedures for accurate flaw sizing

9.1 General

9.1.1 The majority of errors in the TOFD technique can be reduced by careful experimental practice and calibration. However the error due to the lateral uncertainty in the location of the flaw always places a limit on the achievable precision of B-scanning and this should be eliminated to achieve the full potential accuracy of the TOFD technique.

9.1.2 The extra data obtainable from B-scanning of the flaw can be used both to eliminate the uncertainty in the lateral position of the flaw and to confirm assumptions about the association of particular echoes.

This procedure can be employed in all cases where maximum accuracy is required. It is commonly useful in situations where TOFD has been used for the initial inspection and should be employed as the normal procedure in most cases where TOFD is used to size flaws previously located by other techniques.

9.2 Basic considerations

9.2.1 At this stage it may be assumed that the flaw location is known and that some estimate of its likely character has been made.

The first point to consider, once again, is the optimum probe configuration which controls both the accuracy of the technique and the signal-to-noise ratio. This may not be identical to that used fors flaw location.

9.2.2 The two probe form of TOFD, shown in figure 3a), may be used as described in **6.1.9** to **6.1.14**. This is directly relevant to the examination of butt welds in flat plate and circumferential welds in pipes and vessels. For longitudinal welds in curved components the inspection geometry is different (see figure 3b)) but the same basic approach can be used noting that:

a) the effective and true depths of flaws are different;

b) on convex surfaces the direct signal runs across a chord.

These factors affect the choice of the probe separation and frequency.

标准分享网 www.bzfxw.com 免费下载

9.2.3 In a B-scan the lateral position of the flaw is located by moving the probe pair in a direction at right angles to the flaw. This ensures either that the value of X (see **6.1.10** to **6.1.13**) is known or that the measurement can be made at the point when X is known to be zero.

The inspector has some discretion over probe placement and should ensure that the probe separation is sufficient to allow transverse scanning.

9.2.4 The presence of intentional far surface irregularities such as counterbores or of unintentional flaws such as lack of root penetration does not affect the technique and indeed the penetration of these is quantified. Any flaw of a smaller height may be masked unless and until it grows beyond these features.

As a general rule the same considerations apply as for the flaw detection scans, but for accurate flaw sizing, data from B-scans is also available and the data from these should be incorporated in the interpretation.

9.2.5 In the B-scan the flaw tip echo goes through a minimum delay when the flaw lies midway between the probes. This can be used to locate the flaw laterally and is an excellent indication of whether tips are truly associated. The B-scan is also ideal in delineating situations where two flaws are present, for example one on each side of a weld. These associations often give rise to uninterpretable images on a D-scan which are readily resolved in the B-scan.

9.2.6 In the B-scan a planar flaw gives rise to upper and lower tip echoes which appear to emanate from flaws of zero width. If the flaw is not planar this is no longer the case and an estimate of the flaw width, e.g by SAFT, gives rise to a finite value indicating that a volumetric flaw is present.

NOTE. The resolution at best is a few wavelengths so that flaws with a width of less than about 3 mm are not easy to distinguish from planar flaws.

9.3 Choice of appropriate parameters

9.3.1 There are three basic objectives at this stage.

a) First, it is essential that the geometry of the probe pair is such that acceptable precision can be achieved.

b) Secondly it should be confirmed that the system has sufficient gain and signal-to-noise ratio to show up the echoes of interest, and that these can be identified with sufficient reliability.

c) Finally it should be checked that the dynamic range of the system is used efficiently.

9.3.2 From the description of the technique in clause **4**, the accuracy achievable can be modified by changing the probe properties or the probe separation, by controlling the probe lift-off and by controlling the probe separation.

Sufficient gain should be utilized to ensure that the diffracted echoes show up on the record.

9.3.3 It is normally the case that sufficient experience has been obtained during the flaw location stage in order to set realistic gain and digitizer settings. If this is not the case the procedures defined in clause **6** should be followed.

9.4 Interpretation

9.4.1 The lateral location of the flaw is determined by means of the B-scans. To define this location accurately, the start and finish positions of all B-scans should be defined accurately with respect to a reference line. By comparing the results from a number of adjacent B-scans, any lateral movement of the flaw along its length is revealed.

9.4.2 The phase relationships of the echoes observed in the B-scans should be the same as described earlier and the sizing of flaws should thus follow the same procedure as described in clause **6**. Now additional information on the actual value of the lateral location (x) of the flaw is available (or allows a D-scan to be repeated along the line for which $x = 0$.) This results in the most accurate estimate of flaw depth.

9.4.3 Normally the value of x is interpolated from the B-scan data but, at the specific locations of the B-scans, the minimum delay value can be taken in the knowledge that this corresponds to a value of x of zero.

In this way a revised profile of the flaw and its depth within the specimen can be built up. Some equipment may incorporate software and hardware which make this step easier.

9.4.4 The B-scan data can provide other useful information on the flaw of which the most valuable is likely to be the relative lateral position of the flaw tips. This defines the angle of the flaw within the specimen which may help in characterization (of lack of side wall fusion) and also shows up instances where echoes have been wrongly associated with one another.

9.4.5 Additionally the B-scans can resolve echoes which are masked in the D-wave scans. In particular, echoes originating close to the scanned surface or the back wall are often masked by the permanent signals associated with these features. B-scanning takes the probes into highly asymmetric positions where the echoes from these flaws are easily resolved and, because the shape of the expected record can be computed, the depth can be estimated with precision.

The extra information from B-scans may also help to resolve situations where the phase of echoes is uncertain simply by providing more information from a variety of angles.

10 Confirmatory measurements

10.1 The use of the TOFD technique as described in this British Standard results in the detection and sizing of flaws within the component. In addition some estimate of the nature and character of the flaw is made. These estimates may still be uncertain in some cases and in need of confirmation.

10.2 If the use of B-scans has not yet been attempted this should be carried out since it requires little modification to the equipment and may often be carried out by hand. This is valuable in testing assumed relationships between tips, i.e. do two echoes really come from the same flaw? Association is unlikely if the tips are on different sides of the weld for instance. This scan also picks up rare associations of flaws such as lack of side wall fusion on both sides of the weld.

10.3 Other techniques may be employed and other ultrasonic techniques may be especially easy to apply at the same time as TOFD. If a crack is suspected but the phase relationship of the tips remains uncertain then a tandem pulse echo technique can provide a rapid search for the crack face since the TOFD results define the location, depth and angle of the supposed flaw.

10.4 The comparatively poor near surface resolution may mean that the interpretation of some indications near the scanned surface is uncertain and it may not be clear if they are cracks or coupling variations. In this case the surface sensitive techniques such as magnetic particle or eddy current inspection could provide the final judgement once the flaw has been located.

11 Accuracy of measurement

11.1 General considerations

11.1.1 This clause considers the accuracy of the technique and is equally applicable to the search for flaws in D-scans and to accurate flaw sizing. The estimate is of the likely error to be expected from measurements made on echoes which are correctly interpreted. Accuracy should not be confused with reliability which also has to be considered in relation to the particular inspection task.

The accuracy of the measurement depends on the test geometry and the measuring equipment as well as the accuracy of timing the arrival of pulses, as equation (1) makes clear.

11.1.2 It is very useful to distinguish between precision and resolution in the context and different inspections may have a different balance of needs.

Precision is the degree to which the position of a reflector can be defined bearing in mind the likely experimental accuracies. The position of a waveform can readily be defined to, for example, one-tenth of a wavelength and perhaps better. If this is substituted into equation (4) with realistic values for the probe separation it can be shown that precisions in the region of one-quarter of a wavelength are readily obtained.

In the case of the D-scan, the precision is reduced because it is not possible to define the lateral position of the flaw, i.e. X in equation (1). The consequences of this are covered in clause **10**.

Resolution should not be confused with precision. In some inspections, such as a search for surface-breaking flaws, it is possible to assume that the only limitation of TOFD is the precision of the measurements. However in general there may be more than one echo source present and the accuracy is then affected by the need to resolve the echoes from each source.

11.1.3 Examples are the need to resolve the flaw echo from the lateral wave signal, the need to resolve echoes from different, but adjacent, flaws or the need to resolve the top and bottom of a single flaw. In the former case, however, the lateral wave contribution to the echo can normally be removed by subtraction.

11.1.4 In these instances it is possible to assume that the flaw echoes are resolved at a separation which is less than the pulse length but this separation is rarely less than one or two wavelengths. A common situation is the use of a precision calculation to determine the basic accuracy together with a resolution calculation to determine the height of the smallest resolvable flaw.

11.1.5 Reliability is a measure of the possibility that flaws are interpreted wrongly or even missed completely. This is a parameter which cannot be represented by a simple formula. Precision and resolution define the potential of the technique assuming that flaws are identified correctly.

11.1.6 Incorrect interpretation of the data could arise if echoes are wrongly associated and interpreted as, for example, a crack, or if their association is unrecognized and a crack is interpreted as separate slag lines. Care is the main safeguard in achieving reliability and lies behind the caution in the rejection of candidate defects in clause **7** and annex C. Where echo patterns arise which are difficult to interpret, it is important to retain the worst possible interpretation of the data until this can be discarded in the light of new evidence.

标准分享网 www.bzfxw.com 免费下载

11.1.7 Loss of data could arise if echoes are not recognized and the setting up procedure aims to ensure that echoes from real flaws show up clearly on the record. In blind trials with the technique, flaws have always been identified correctly but it is only possible to assume that flaws are recognized if appropriate calibration is carried out.

11.2 Timing and velocity errors

11.2.1 The achievable precision arising from timing errors can be estimated from equation (2), when it is differentiated with respect to d. In this case the error (Δd) in the estimate of depth becomes:

$$\Delta d = C\,\Delta T\,[d^2 + S^2]^{1/2}/2d \qquad (7)$$

where

d is the depth of point D below the surface (see figure 3);

C is the ultrasonic velocity;

ΔT is the error in timing;

Δd is the error in d;

$2S$ is the separation of the probe index points.

This shows that there is an advantage in keeping the probe separation as small as possible consistent with achieving a transverse scan. The timing error can be reduced by using shorter pulsed or higher frequency probes and by higher digitization rates (but see **11.6.2**).

11.2.2 Errors in the ultrasonic velocity may also cause errors in the estimate of depth and the error Δd introduced by a change ΔC in the velocity is given by:

$$\Delta d = \Delta C[d^2 + S^2] - S(d^2 + S^2)^{1/2}/Cd \qquad (8)$$

Once again the error is reduced if the probe separation is reduced. This error is normally greatly reduced because the time delay of the back wall echo allows an independent estimate of velocity reducing ΔC to a very low value.

11.3 Lateral uncertainty in the flaw position

11.3.1 In an experimental situation a time of flight, T, may be measured accurately but the lateral position of the source of the echo (X) is only poorly known. Under these circumstances a range of values of possible flaw depth values is computed corresponding to possible values of X.

By expanding equation (1) it can be shown that the relationship between X and the estimated flaw depth d is given by equation (4).

11.3.2 The maximum possible estimate of depth occurs when it is assumed that $X = 0$. At this value equation (1) becomes identical to equation (4). The locus of possible positions and depths is the ellipse defined by equation (7) which has the beam entry points (probe indices) as its foci.

11.3.3 Depending on the nature of the specimen and the choice of probe it is normally possible to define X within certain limits. Thus the width of a weld and the heat affected zone usually places an upper limit on X. Similarly the lower edges of the beams may define a limit beyond which a flaw echo is not seen.

11.3.4 It should be noted that we have a good idea of the value of CT since the horizontal semi-axis of the ellipse is $0.5CT$). For example, if it is assumed that X does not exceed a value of $0.2CT$ then it is possible to define the maximum and minimum possible depths for any given observed delay time (see equations (5) and (6)).

In this case there is an 8 % variation in the possible depth.

NOTE. The normally assumed value of depth is the maximum possible value in this case.

A generally more accurate estimate of depth is obtained if this value is reduced by one-half of the calculated range, e.g. 4 % in the present case. The maximum error is then 4 % which is 0.4 mm for the 10 mm deep reflector but 2.0 mm for the 50 mm deep reflector.

11.3.5 In the majority of cases, the error in determining the depth of the flaw (d) does not exceed 10 % which shows the efficiency of the two-probe form of TOFD in determining the depth of reflectors from a simple scan with little error due to probe placement. If this contribution to the total error is considered to be too large it can be reduced by increasing the probe separation; at the cost of increasing the other errors.

11.4 Index point migration

11.4.1 Equations (1) to (8) make the fundamental assumption that the ultrasound enters the specimen at a fixed index point. Since the ray paths within the beam in the specimen may take any angle between, for example, 45° and 90° and the refractive index is in the region of four, this is a reasonable but not perfect assumption.

11.4.2 When the probe separation is smaller than about twice the specimen depth and flaws are sought throughout the specimen thickness, the assumption begins to break down and systematic errors may be introduced. It is more correct to assume that the origin of the rays is a fixed point at the centre of the probe disc. These rays are refracted at the specimen surface and the higher angle rays not only form the higher angle rays in the specimen but also strike the specimen at an index point nearer the front of the probe. In essence the probe separation becomes a function of reflector depth.

11.4.3 The possible magnitude of the error can be estimated by calculating the angle between the limiting rays in the probe shoe; the velocity of sound in the shoe and in the specimen is known. This can then be used to estimate the maximum change in effective probe separation. Finally the use of equation (1) provides an estimate of the possible error.

11.4.4 The effect of index point migration may be calculated as indicated but in many practical situations it may be preferable to 'calibrate out' the effect by performing measurements on, normally artificial, flaws at various depths below the surface. For accurate flaw tip location this calibration curve can be used as a replacement for the theoretical relationship between tip depth and observed time delay. Comparison of the calibration data with the normal theory provides a direct indication of the importance of allowing for index point migration in each specific case.

11.4.5 As an example, if the limiting rays are indeed at 45° and 90° and the specimen is of steel (C = 6000 m/s) and the probe shoe of Perspex® (C = 2400 m/s) the limiting rays in the shoe will be at angles of 16.5° and 23°, respectively. By geometry, if the probe shoe is 10 mm thick, these rays strike the specimen 1.3 mm apart. That is, the probe separation may change by 2.6 mm. This is negligible if the probe separation is 200 mm but should be taken into account if the separation is, for example, only 10 mm. Note however that the change is monotonic and can be estimated to varying degrees of accuracy if required. Thus the common assumption that the effective separation changes between the extremes as a linear function of the flaw depth in the specimen is only approximate but reduces the errors by an order of magnitude.

11.5 Scanning and replacement errors

11.5.1 The final source of error to be considered is that due to the use of the scanning equipment, whether this is simple or complex. Any mechanical tolerances in the scanning system may allow the probes to move and this introduces a certain amount of error. Alternatively, the arrivals of the other waves of interest are modified by the same factors providing at least a partial calibration.

11.5.2 Changes in the lift-off of one or both of the probes may be allowed by the scanner and can be increased if the specimen surface is rough. Because the refractive index is comparatively high, the technique is relatively stable against this kind of change. Thus, if the velocity of sound in the couplant is V, the error in depth measurement Δd produced by a change ΔH in couplant thickness is given by:

$$\Delta d = \Delta H\, C\, d/(4\, C\, (d^2 + S^2)^{1/2}) \qquad (9)$$

As an example, for a probe separation of 150 mm, a reflector depth of 25 mm, a couplant velocity of 1500 m/s and a steel specimen, the error Dd is estimated to be 0.02 mm for a 1 mm change in lift-off.

11.5.3 A more serious error is introduced if the scanner allows the probe separation to change significantly. In this case the error in depth measurement Δd produced by a change in the half separation of the probes is given by:

$$\Delta d = \Delta S\, [(d^2 + S^2)^{1/2} - S]/d \qquad (10)$$

As an example, the error introduced into the estimate of the depth of the flaw in **11.5.2** by a 1 mm change in S is shown to be 0.08 mm.

11.6 Summary

11.6.1 It should be noted that the errors arising from probe lift-off and changes in probe separation are increased if the probe separation is reduced, whereas the effect of timing errors and of velocity changes is reduced. Some compromise will have to be made in each measurement. It is often erroneously assumed that lift-off and probe separation changes can be neglected, leading to unrealistic probe separations and attempts to reduce timing errors.

11.6.2 Timing errors are often the dominant contributor to the total error for near surface flaws (when d is small). However, the other sources of error are important in most situations and this is supported by independent trials which consistently show greater errors than would be expected from timing alone. It is essential to design the measurement around realistic estimates of all likely errors.

11.6.3 Once a test geometry has been decided upon, it is necessary to make an accurate estimate of the error likely in the measurement and to confirm that this is sufficiently small.

12 Training and qualification

12.1 Personnel performing TOFD inspections should be suitably trained and qualified. Organizations performing the necessary training, testing and qualification of personnel should prepare written procedures to control these activities.

12.2 The training and qualification requirements should be agreed between the parties concerned, taking due account of the extent of procedure validation and the criticality of the application.

NOTE. See also annex E.

标准分享网 www.bzfxw.com 免费下载

Annexes

Annex A (informative)
Special techniques based on TOFD

A.1 General

To enhance accuracy, improve resolution or aid interpretation it may be effective to use TOFD in a special form. Simple examples of this are the use of higher frequency probes or probes with shorter pulses. Another technique is to bring the probes closer together.

Other approaches are possible, however, and may be more attractive than the simpler options in certain circumstances. These are described in **A.2** to **A.4**.

A.2 Use of the double reflected echo

A.2.1 Where there is a problem in resolving/sizing features near the scanned surface it may be beneficial to observe the feature by a reflection in the rear surface. This has the same effect as if the feature were deeper in the specimen with a consequent improvement in resolution.

A.2.2 Two conditions should be satisfied. Firstly the back wall of the specimen should provide the basis of a suitable reflection. Thus angled surfaces or rough surfaces are not likely to provide a suitable response. Secondly the probe separation used should be at least three times the thickness of the specimen to ensure that the echo arrives before the strong mode converted back wall echo (see **A.3**).

A.3 Use of the mode converted echoes

A.3.1 When compressional wave ultrasound interacts with a reflector or the back wall echo a substantial degree of mode conversion into the vertically polarized (SV) mode occurs. This may give rise to a series of echoes from features in the specimen which follow those due to the compressional wave.

A.3.2 These echoes can provide an exceptional resolution for shallow flaws when one probe can be placed very close (laterally) to the flaw. Under these circumstances the relationship between flaw depth and time delay is almost linear and there is still reasonable efficiency.

A.3.3 In all instances these echoes may provide a rather better resolution than the compressional wave data because of the slower velocity of the shear wave beam path component.

In this case the probe separation should be set to a value less than 2.5 times the specimen thickness.

A.4 Use of off axis scans

A.4.1 Although the normal requirement is to scan in such a manner that the defects lie close to the centre plane between the probes, the time delay between the lateral/creeping wave and the echo from a shallow defect increases if the flaw is close to one of the probes. This is shown by equation (1).

A.4.2 The resolution between these echoes can be improved by using an off axis scan at the expense of greater errors due to the migration of the defect position with respect to the probes during the scan. However, if the lateral defect location is reasonably well defined (e.g. by using lateral TOFD scans) the accuracy of the measurement need not suffer.

Annex B (informative)
Application of TOFD and reporting criteria

B.1 General

There are three different means of applying acceptance/reporting criteria with the TOFD technique:

a) change monitoring;

b) TOFD for screening and sizing, with reliance on traditional non-destructive testing methods for sentencing against established acceptance criteria;

c) TOFD in isolation.

Procedures should be developed to cater for specific applications.

B.2 Change monitoring

B.2.1 ***General***

Change monitoring is suitable for welds that have been accepted according to a fabrication code by traditional non-destructive testing methods but are required to be inspected at intervals during service to establish either the initiation of new flaws or the propagation of inherent flaws.

B.2.2 ***Procedure***

B.2.2.1 Perform 'fingerprint' scans of all welds to be monitored at the as-built condition, i.e. pre-service inspection (PSI). For components already in service, this may be performed at a convenient point in time (e.g. shutdown), but meaningful information will not be available until the inspection is repeated after an interval of service, i.e. in-service inspection (ISI). Record all set-up parameters to enable the inspection to be faithfully reproduced. Store unrectified A-scans from all locations for subsequent retrieval and comparison.

B.2.2.2 Repeat the initial scans using an identical procedure after a period of service. Make a visual comparison of the D-scan images from the PSI and ISI stages. Any indications evident in the ISI images which are not evident in the PSI images are indicative of service induced flaws. Any flaws which exhibit differences in dimensions between the PSI and ISI data sets are indicative of flaw propagation during service. The extent of flaw growth can be quantified, providing information on flaw propagation rates. This information can then be used for plant remaining life calculations or for strategic repair/replacement planning. Additional information may be collected, such as supplementary TOFD scans and/or pulse-echo scans to generate data on the nature and orientation of the flaw(s). In the event of the evidence provided by TOFD scans that no service induced flaw is apparent, justification may be sought to extend the period of service before re-inspection, and hence plant shutdown, is required.

B.3 TOFD screening

B.3.1 ***General***

In many cases fabrication codes incorporate a requirement for radiography and/or pulse-echo ultrasonics with established and accepted quality control acceptance criteria.

TOFD may be used to replace many of the functions of these traditional methods provided it is demonstrated that TOFD has the capability to detect and identify flaws requiring detection at least as reliably as the conventional methods. This is particularly relevant to the production welding of vessels, structures for the offshore industry, pipework systems and pipelines where automated welding processes are employed.

The incidence of flaw occurrence when using properly applied welding procedures is low. Flaws tend to occur where the welding procedure has 'gone out of control' and tend to be significant in terms of quality control and the necessary corrective action. Most welds can be rapidly screened by TOFD and demonstrated to be free of significant flaws and require no further action.

B.3.2 ***Procedure***

B.3.2.1 Scan all welds to be inspected using the appropriate TOFD technique. Ignore isolated point indications which exhibit no through wall extent. Report all multiple, linear or clustered indications.

B.3.2.2 Back-check all indications considered reportable in **B.3.2.1** using the conventionally specified non-destructive testing technique (pulse-echo ultrasonics and/or radiography). If the indication(s) are considered to be acceptable to the code, no further action needs to be taken.

B.3.2.3 In the event that indication(s) are deemed to exceed code-specific acceptance levels, the indication(s) may be sized using TOFD for through wall measurement and SAFT for length measurement to verify actual flaw dimensions. The inherent accuracy and reliability of these sizing methods may be taken into consideration for applying acceptance levels derived from fitness for purpose or engineering critical assessment criteria subject to agreement between the client, fabricator and inspection authority/insurance company.

B.3.2.4 Subject to agreement between all parties, store all radio frequency waveforms to form the basis of the fingerprint or ISI inspection as described in **B.2**.

B.4 TOFD reporting criteria

TOFD may be used in isolation as the prime inspection method using the following reporting criteria. Identification of individual flaw type is not a requirement.

a) Report all indications which exhibit a through-wall extent of w mm or greater, regardless of length.

b) Report all linear indications exceeding x mm in length which have a through-wall extent of less than w mm.

c) Report all indications which lie within w mm of either surface other than isolated points.

d) Report all clusters of point indications exceeding y points contained within z mm^2 of projected (D-scan) weld area.

NOTE 1. Items designated w, x, y and z are dependent on application and are subject to agreement between all parties.

NOTE 2. Supplementary non-destructive testing techniques may be required to discriminate near surface flaws such as magnetic particle inspection and creep wave examination.

标准分享网 www.bzfxw.com 免费下载

Annex C (informative)

Suggested steps towards the characterization of flaw echoes in TOFD

The suggested steps towards the characterization of flaw echoes in TOFD are as follows.

a) After longitudinal (non-parallel) scan

1) Is the echo from a pore or a short length of slag?

Main clues	A	Form of the flaw echo — compare with the cursor. Does it correspond to zero-length flaw?
	B	Amplitude generally greater than that from calibration slit.
Actions	If confirmed	Flaw is not usually reportable — therefore eliminate from summary
	If unsure	Go to next test

2) Is the echo for a deep pore or short length of slag?

Main clues	A	Pair of echoes at different depths may be poorly resolved
	B	Form of echoes — corresponds to zero-length flaw
	C	Amplitude of top echo greater than that for calibration slit
Actions	If confirmed	Flaw is not usually reportable — therefore eliminate from summary
	If unsure	Go to next test

3) Is the echo from a long slag line?

Main clues	A	Pulse shape of the flaw echo - is it similar to that from pores?
	B	Single echo with no other co-linear echoes at greater or lesser depth in the specimen
	C	Amplitude generally greater than that from calibration slip
	D	Use of cursor shows flaw has finite length
Actions	If confirmed	Flaw is often reportable beyond a minimum length Use parallel scan to determine depth below surface Report length and depth below surface
	If unsure	Go to next test

4) Is the echo from a segmented or irregular slag line?

Main clues	A	Pulse shape of the flaw echo — is it similar to that from pores?
	B	Multiple echoes but with no other co-linear echoes at greater or lesser depth in the specimen
	C	Amplitude generally greater than that from calibration slit
	D	Use of cursor shows a number of features at similar depth, most with finite length
Actions	If confirmed	Flaw is often reportable — total length normally required not that of each segment Use parallel scan to determine depth below the surface and to confirm that segments are linked Report total length and depth below surface
	If unsure	Go to next test

5) Is the echo from an internal crack-like flaw?

Main clues	A	Pair of echoes at different depths in the specimen
	B	180° phase change between the pair of echoes
	C	Top echo similar to backwall echo. Bottom echo similar to lateral wave
	D	Amplitude of the echoes - similar to that from calibration slit?
Actions	If confirmed	Flaw always reportable Use parallel scan to confirm association and determine depth, length and phase change
		Report length, height and distance to each surface
	If unsure	Go to next test

6) Is the echo from a deep slag line?

Main clues	A	Pair of echoes at different depths in the specimen
	B	Upper echo substantially larger
	C	Pulse shape of the upper echo — is it similar to that from pores?
	D	Amplitude of the lower echo — similar to that from calibration slit?
	E	Amplitude of the upper echo — similar to that from pores
	F	Near 180° phase change between the pair of echoes
Actions	If confirmed	Flaw is often reportable beyond a minimum length
		Use parallel scan to confirm association and determine depth, height and phase drop
		Report length, height and depth below surface
	If unsure	Go to parallel scan tests

7) Is the echo from an upper-surface-breaking crack-like flaw?

Main clues	A	Apparent migration of lateral wave echo to deeper depths. May need to align backwall echo to make this clear
	B	Local change in character of the lateral wave echo. Usually to a higher frequency content
	C	Phase of echo remains similar to the lateral wave
	D	Phase of echo similar to that from calibration slit?
Actions	If confirmed	Flaw is always reportable Use parallel scan to determine height Report length and height
	If unsure	Go to parallel scan tests

8) Is the echo from a lower-surface-breaking crack-like flaw?

Main clues	A	Migration of echo away from and back to the backwall echo. Note echo may not always meet the backwall echo
	B	Amplitude of the echo — similar to that from calibration slit?
	C	Phase similar to that of the backwall echo
Actions	If confirmed	Flaw is always reportable Use parallel scan to determine height Report length and height
	If unsure	Go to parallel scan tests

标准分享网 www.bzfxw.com 免费下载

9) Porosity, etc.

Main clues	A	Complex records and patterns of acoustic noise
Actions	If confirmed	Can't confirm solely from non-parallel scan
	If unsure	Go to parallel scan tests

10) Other echoes

Actions		Go to parallel scan tests

b) After following transverse (parallel) scan

11) Is the echo from a slag line?

Main clues	A	Pulse shape of the flaw echo — is it similar to that from pores?
	B	Single echo now shown to be isolated from other echoes
	C	Amplitude generally greater than that from calibration slit
Actions	If confirmed	Flaw is often reportable beyond a minimum length Report flaw as a slag line quoting length and depth below surface
	If unsure	Go to next test

12) Is the echo from an internal crack-like flaw?

Main clues	A	Pair of echoes at different depths in the specimen but now shown to be at similar lateral positions
	B	180° phase change between the pair of echoes
	C	Top echo similar to backwall echo. Bottom echo similar to lateral wave
	D	Amplitude of the echoes - similar to that from calibration slit?
Actions	If confirmed	Flaw always reportable Report length, height and distance to each surface
	If unsure	Go to pulse echo test

13) Is the echo from a deep slag line?

Main clues	A	Pair of echoes at different depths in the specimen but now shown to be at similar lateral positions
	B	Upper echo substantially larger
	C	Pulse shape of the upper echo — is it similar to that from pores?
	D	Amplitude of the lower echo — similar to that from calibration slit? Lower echo may be easier to see than in the non-parallel scan
	E	Near 180° phase change between the pair of echoes
	F	Flaw may have finite width when compared to cursor
Actions	If confirmed	Flaw is often reportable beyond a minimum length
	If unsure	Go to pulse echo test

14) Is the echo from a lower-surface-breaking crack-like flaw?

Main clues	A	Change of time of arrival of echo reaching minimum when probes are symmetrical above the flaw tip
	B	Abrupt migration of lateral wave echo to deeper depths as probes scan across the defect. May need to align backwall echo to make A and B clear
	C	Local change in character of the lateral wave echo. Usually to a higher frequency content
	D	Phase of echo remains similar to the lateral wave
	E	Phase of echo similar to that from calibration slit?
Actions	If confirmed	Flaw is always reportable Report length and height
	If unsure	Go to pulse echo test

15) Is the echo from a lower-surface-breaking crack-like flaw?

Main clues	A	Zero width flaw echo close to the backwall echo. Flaw signal may be observable in region beyond the backwall echo
	B	Amplitude of the echo — similar to that from calibration slit?
	C	Phase similar to that of the backwall echo
Actions	If confirmed	Flaw is always reportable Report length and height
	If unsure	Go to pulse echo test

16) Overlapping cracks

Main clues	A	Complex records now resolved into well separated pairs of echoes, e.g. from either side of the weld
	B	Pair of echoes at different depths in the specimen but now shown to be at similar lateral positions
	C	180° phase change between the echoes of each pair
	D	Top echoes similar to backwall echo. Bottom echo similar to lateral wave
	E	Amplitude of the echoes — similar to that from calibration slit?
Actions	If confirmed	Flaw is always reportable Report height, length and depth of each indication
	If unsure	Go to next test

17) Overlapping slag record

Main clues	A	Complex echoes now resolved into a number of single echoes at different depths and lateral position in the specimen
	B	Pulse shape of the flaw echo — is it similar to that from pores?
	C	Single echo now shown to be isolated from other echoes
	D	Amplitude generally greater than that from calibration slit
Actions	If confirmed	Flaw is usually reportable Report individual total lengths and depths of these indications
	If unsure	Go to next test

标准分享网 www.bzfxw.com 免费下载

18) Porosity

Main clues	A	Complex records remain complex with flaws at a variety of depths and lateral positions
	B	Echoes have no, or small, finite lengths in both dimensions
Actions	If confirmed	Flaw is usually reportable Report total length and depth of material covered by these indications
	If unsure	Go to next test

19) Associated possible crack like flaws

Main clues	A	Complex records resolved to a series of echoes on one edge of the weld or one lateral location
	B	Some flaws may show 'top' and 'bottom' echoes but this may be unclear due to resolution limits
Action	If confirmed	Report total length and height for fracture mechanics purposes
	If unsure	Go to pulse echo tests

c) After following pulse echo test

20) Is the echo from a slag line?

Main clues	A	Pulse amplitude does not vary much as a function of angle
	B	Flaw readily located at a wide range of angles
Actions	If confirmed	Flaw is often reportable beyond a minimum length Report flaw as a slag line quoting length and depth below surface
	If unsure	Go to next test

21) Is the echo from an internal crack-like flaw?

Main clues	A	Specular large reflection at angle predicted by TOFD
	B	Only small echoes observed at other angles
Actions	If confirmed	Flaw is always reportable Report length, height and distance to each surface
	If unsure	Unless alternative explanation is confirmed (e.g. slag line) it is essential to report as being crack-like

22) Is the echo from a deep slag line?

Main clues	A	Pulse amplitude does not vary much as a function of angle
	B	Flaw readily located at a wide range of angles
	C	Finite depth resolvable by pulse echo?
Actions	If confirmed	Flaw is often reportable beyond a minimum length. Report length, height and depth below surface
	If unsure	May be essential to regard as an internal crack-like flaw

23) Is the echo from an upper-surface-breaking crack-like flaw?

Main clues	A	Specular large corner reflection and/or at angle predicted by TOFD
	B	Only small echoes observed at other angles
Actions	If confirmed	Flaw is always reportable Report length and height
	If unsure	Consider other test such as magnetic particle inspection

24) Is the echo from a lower-surface-breaking crack-like flaw?

Main clues	A	Specular large corner reflection and/or at angle predicted by TOFD
	B	Only small echoes observed at other angles
Actions	If confirmed	Flaw is always reportable Report length and height
	If unsure	No obvious alternative (all ruled out by now). It is essential to take conservative option — consider monitoring options

25) Porosity

Main clues	A	Pulse echo records remain complex
Actions	If confirmed	Report total volume affected above
	If unsure	Go to next test

26) Associated crack like flaws

Main clues	A	Pulse echo records simpler and show some evidence of specular reflection
Actions	If confirmed	Report total height and length of the flaw complex
	If unsure	Assume most pessimistic interpretation — consider monitoring option

标准分享网 www.bzfxw.com 免费下载

Annex D (informative)
Examples of typical scans

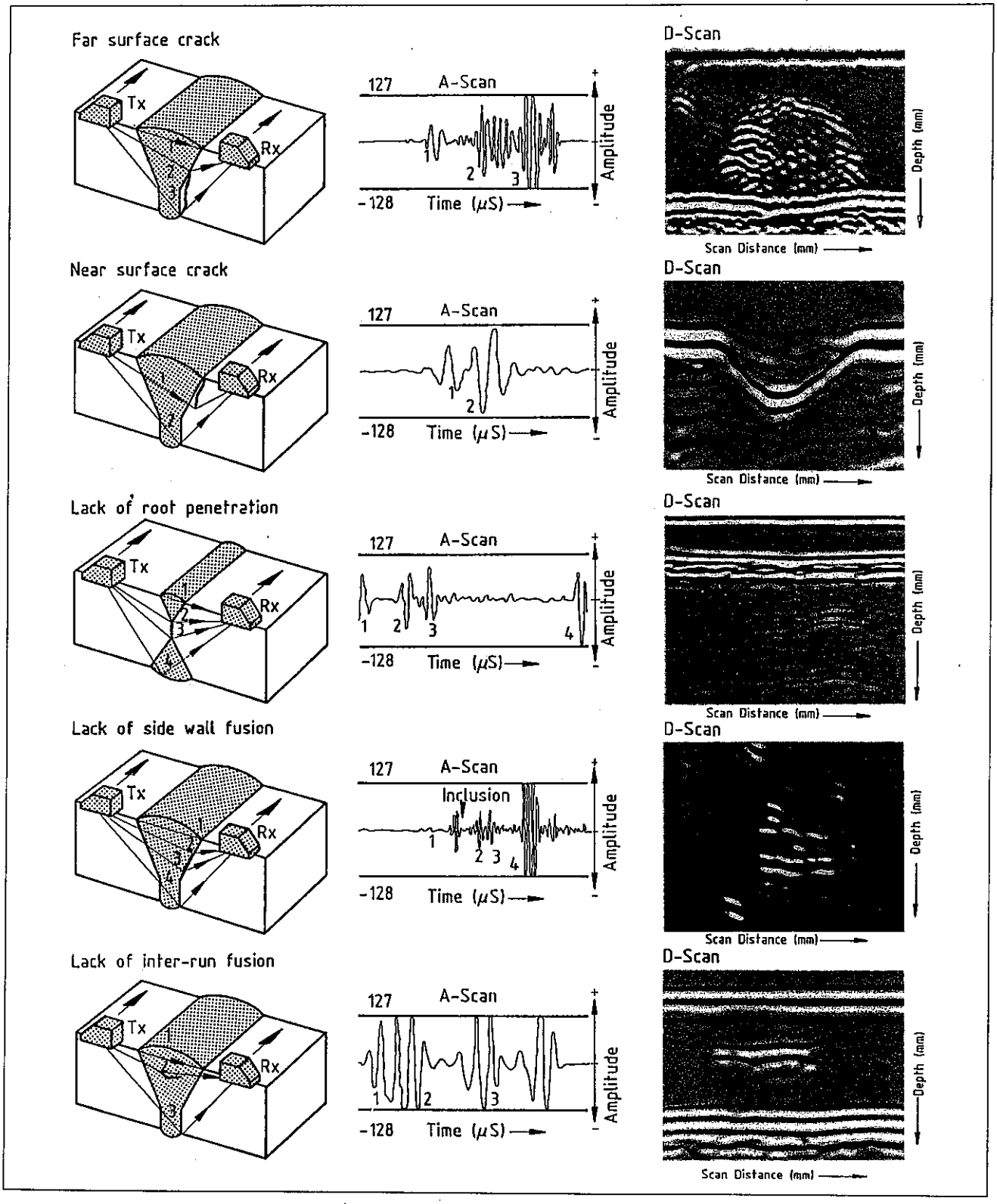

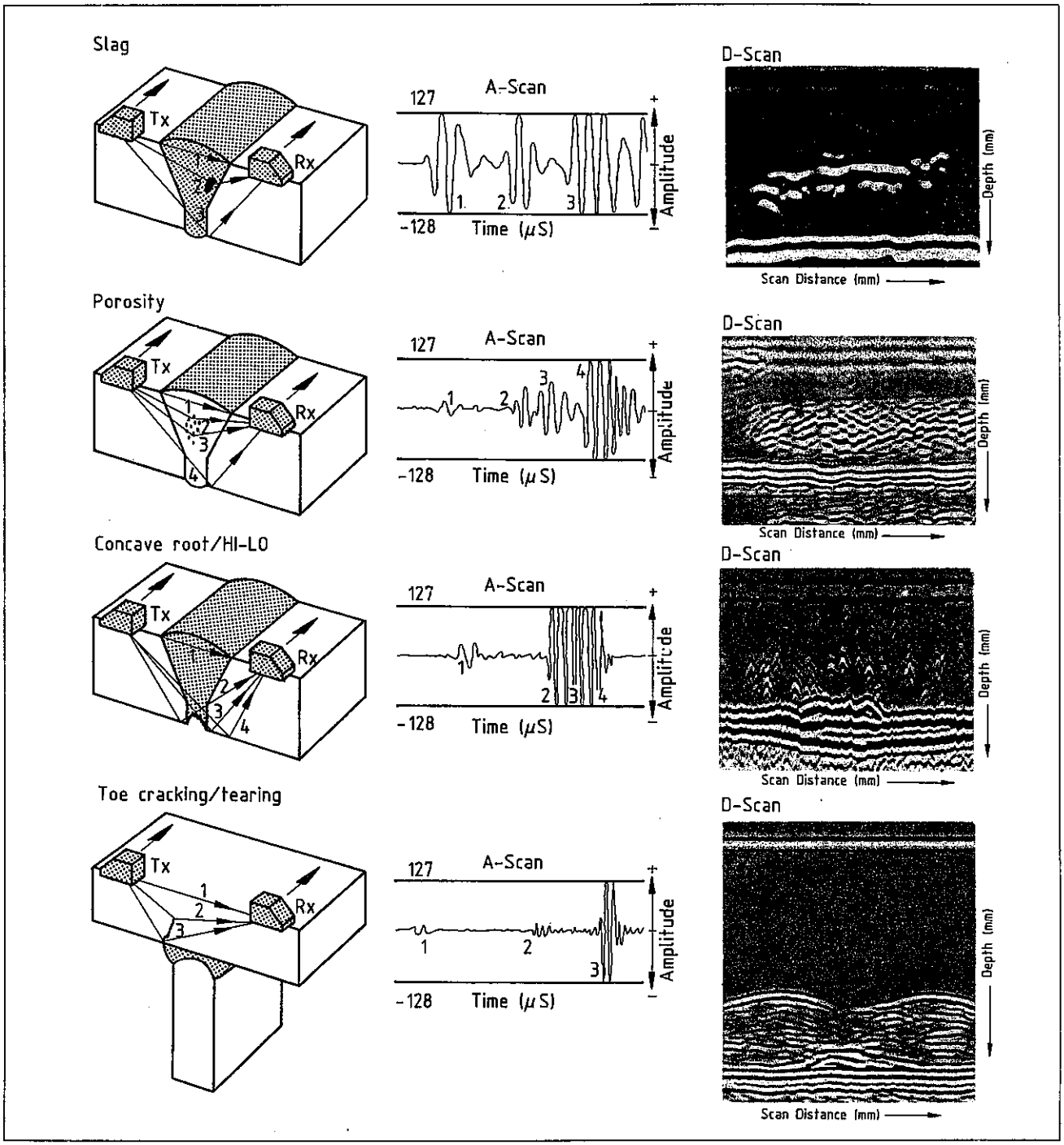

标准分享网 www.bzfxw.com 免费下载

Annex E (informative)
Suggested framework for training and qualification

E.1 In the absence of an existing scheme the framework in **E.2** to **E.5** is suggested as the basis of a mutually agreed scheme (see **12.2**).

E.2 There could be three levels of qualification for TOFD; TOFD 1 (data acquisition), TOFD 2 (data analysis), and TOFD 3 (supervisor).

E.3 TOFD 1 personnel performing data acquisition are probably already qualified as a Level I, or equivalent. Additionally they should be trained and qualified in the specialties of TOFD. This should enable the Level I operator:

a) to perform data acquisition in accordance with written instructions and procedures;

b) to assemble and calibrate the data acquisition equipment;

c) to be conversant with the data displays of the equipment and to know from this that the data being collected meets the requirements of the written procedure;

d) to be able to decide from the initial data acquisition if further scans may be necessary for evaluation purposes;

e) to be familiar with the data handling and storage used by the TOFD system.

E.4 The TOFD 2 level of operator requires more experience. Personnel performing data analysis are probably already qualified as a Level II, or equivalent. Additionally they have probably spent a period of two years using TOFD as data acquisition technicians and have worked alongside a data analyst to gain experience. In addition to Level I requirements a Level II operator should be able:

a) to set up and calibrate the complete TOFD system;

b) to be familiar with probe configurations and parameters which affect the accuracy of the inspection, which are described in this British Standard, such as material velocity, time delay in the transducer and transducer separation;

c) to collect, archive, process, report and evaluate inspection data in accordance with this British Standard and other relevant codes and standards;

d) to supervise and provide on-the-job training for Level I technicians;

e) to organize and report results from inspections made with TOFD;

f) to be familiar with the limitations of TOFD and be sufficiently capable of applying complementary non-destructive examination techniques.

E.5 The TOFD 3 grade requires the most experience and would be considered as an engineer grade. Personnel in this grade are probably already qualified as a Level III or equivalent. Additionally they have probably spent a period of four years using TOFD as a Level I and Level II and have worked alongside a Level III to gain the necessary experience. In addition to Level I and Level II requirements, the Level III should be capable of:

a) interpreting this British Standard, and other codes, standards, procedures, and specifications;

b) establishing and designating techniques and procedures which are to be used;

c) specifying where complimentary non-destructive testing methods are to be used to supplement TOFD inspections;

d) supervising and providing on-the-job training for Level I and Level II technicians;

e) interpreting and evaluating inspection results in terms of this British Standard and other applicable codes and standards.

The background experience for this level includes:

1) a thorough understanding of this and other advanced ultrasonic inspection, sizing, and processing techniques;

2) a familiarity with other appropriate non-destructive testing methods;

3) sufficient practical background in the applicable material and fabrication technologies and material degradation mechanisms caused by service conditions or environment, and to assist in both data evaluation and in the establishment of acceptance criteria where none are available.

Formal training in TOFD should as a minimum include the following:

i) TOFD principles;

ii) calibrating a TOFD system;

iii) 'A', 'B' and 'D' scan presentation of data;

automated systems - including use of computer, data storage and retrieval, offline processing and enhancement of data and presentation of data;

iv) interpretation of results.

Adequate time should be allowed during the training for practical work.

List of references (see clause 2)

Normative references

BSI standards publications

BRITISH STANDARDS INSTITUTION, London

BS 3683 :	*Glossary of terms used in non-destructive testing*
BS 3683 : Part 4 : 1985	*Ultrasonic flaw detection*
BS 3923 :	*Methods for ultrasonic examination of welds*
BS 3923 : Part 1 : 1986	*Methods for manual examination of fusion welds in ferritic steels*

Informative references

BSI standards publications

BRITISH STANDARDS INSTITUTION, London

BS 2704 : 1978	*Specification for calibration blocks for use in ultrasonic flaw detection*
BS 4331	*Methods for assessing the performance characteristics of ultrasonic flaw detection equipment*
BS 4331 : Part 1 : 1978	*Overall performance: on-site methods*
BS 4331 : Part 2 : 1972	*Electrical performance*
BS 4331 : Part 3 : 1974	*Guidance on the in-service monitoring of probes (excluding immersion probes)*
BS 5500 : 1991	*Specification for unfired fusion welded presure vessels*

American Society of Mechanical Engineers publications

AMERICAN SOCIETY OF MECHANICAL ENGINEERS (Publication available from BSI Sales)

ASME Boiler and pressure vessel code Section XI Rules for in-service inspection of nuclear power plant components

Other references

[1] *Review and discussion of the development of the synthetic aperture focussing technique for ultrasonic testing*, Busse L.J., Collins H.D. and Doctor S.R., NUREG/CR 3652 (PNL 4957), 1984

[2] *An introduction to the concepts and hardware used for ultrasonic time-of-flight data collection and analysis*, Slesenger T.A., Hesketh G.B. and Silk M.G., AERE-M-3388, 1985

[3] *Experience with the time-of-flight diffraction technique*, Carter P., *British Journal of NDT* 26(6), p354, 1984

标准分享网 www.bzfxw.com 免费下载

BSI — British Standards Institution

BSI is the independent national body responsible for preparing British Standards. It presents the UK view on standards in Europe and at the international level. It is incorporated by Royal Charter.

Contract requirements

A British Standard does not purport to include all the necessary provisions of a contract. Users of British Standards are responsible for their correct application.

Revisions

British Standards are updated by amendment or revision. Users of British Standards should make sure that they possess the latest amendments or editions.

Any person who finds an inaccuracy or ambiguity while using this British Standard should notify BSI without delay so that the matter may be investigated swiftly.

BSI offers members an individual updating service called PLUS which ensures that subscribers automatically receive the latest editions of standards.

Buying standards

Orders for all BSI, international and foreign standards publications should be addressed to Customer Services, Publications at Milton Keynes:
Tel: 0908 221166; Fax: 0908 322484.

In response to orders for international and European standards, it is BSI policy to supply the BSI implementation of those that have been published as British Standards, unless otherwise requested.

Information on standards

BSI provides a wide range of information on national, European and international standards through its Library, the Standardline Database, the BSI Information Technology Service (BITS) and its Technical Help to Exporters Service. Contact Customer Services, Information at Milton Keynes:
Tel: 0908 226888.

Subscribing members of BSI are kept up to date with standards developments and receive substantial discounts on the purchase price of standards. For details of these and other benefits contact Head of Customer Services, Membership Group at Milton Keynes: Tel: 0908 226777.

Copyright

Copyright subsists in all BSI publications and no part may be reproduced in any form without the prior permission in writing of BSI. This does not preclude the free use, in the course of implementing the standard of necessary details such as symbols and size, type or grade designations including use by incorporation into computer programs, but where these details are reproduced including without limitation in printed form, in computer programs or in any other form whatsoever, the permission in writing of BSI must be obtained and if granted will be on terms including royalty, before the product is sold, licensed or otherwise exploited for commercial gain. Enquiries about copyright should be made to the Copyright Manager, Publications at Milton Keynes.

BSI
2 Park Street
London
W1A 2BS

BSI
Linford Wood
Milton Keynes
MK14 6LE

9312—8—0.3k—B

ISBN 0 580 22311 6

WEE/46