BRITISH STANDARD

BS 7448-3:2005
Incorporating
Corrigendum No. 1

Fracture mechanics toughness tests —

Part 3: Method for determination of fracture toughness of metallic materials at rates of increase in stress intensity factor greater than 3.0 $\mathrm{MPa \cdot m^{0.5}s^{-1}}$

ICS 77.040.10

British Standards

Committees responsible for this British Standard

This British Standard was entrusted by Technical Committee ISE/NFE/4, Mechanical testing of materials, to Subcommittee ISE/NFE/4/4, Toughness testing, upon which the following bodies were represented:

British Non-Ferrous Metals Federation
GAMBICA Limited
HSE — Health and Safety Executive
Lloyd's Register
National Physical Laboratory
Network Rail
QinetiQ
Society of British Aerospace Companies Ltd.
UK Steel Association
United Kingdom Accreditation Service
Welding Institute

This British Standard was published under the authority of the Standards Policy and Strategy Committee on 23 March 2005

First published March 2005

The following BSI references relate to the work on this British Standard:
Committee reference ISE/NFE/4/4
Draft for comment 03/303157 DC

ISBN 978 0 580 59480 9

Amendments issued since publication

Amd. No.	Date	Comments
17334 Corrigendum No. 1	31 August 2007	In Foreword, added supersession detail.

Contents

Foreword

This part of BS 7448 has been prepared by Technical Committee ISE/NFE/4. It is required because the instrumentation and procedures in BS 7448-1 may not be adequate for high rate tests.

This British Standard supersedes BS 6729:1987 which is withdrawn.

This part of BS 7448 is one of a series dealing with fracture mechanics toughness tests, the other parts being:

— *Part 1: Fracture mechanics toughness tests — Method for determination of K_{Ic} critical CTOD and critical J values of metallic materials.*

— *Part 2: Fracture mechanics toughness tests — Method for determination of K_{Ic}, critical CTOD and critical J values of welds in metallic materials.*

— *Part 4: Fracture mechanics toughness tests — Method for determination of fracture resistance curves and initiation values for stable crack extension in metallic materials.*

It is assumed in the drafting of this standard that the execution of its provisions is entrusted to appropriately qualified and competent people.

This British Standard describes methods of test only, and should not be used or quoted as a specification. References to this standard should indicate that the methods of test used are in accordance with BS 7448-3:2005.

CAUTION It is important to note that tests of the type described involve the use of large forces, and may involve the rapid movement of machine parts and fractured test specimens. Therefore it is important to consider the safety of machine operators.

This publication does not purport to include all the necessary provisions of a contract. Users are responsible for its correct application.

Compliance with a British Standard cannot confer immunity from legal obligations.

Summary of pages

This document comprises a front cover, an inside front cover, pages i to iv, a blank page, pages 1 to 55 and a back cover.

The BSI copyright notice displayed in this document indicates when the document was last issued.

blank

1 Scope

This part of BS 7448 describes a method for determining the opening mode plane strain fracture toughness K_{Ic}, the critical crack tip opening displacement (CTOD) fracture toughness and the critical J fracture toughness of metallic materials. The method uses fatigue precracked specimens tested in displacement control at rates of increase in stress intensity factor greater than 3.0 $\mathrm{MPa \cdot m^{0.5} s^{-1}}$ but less than 3 000 $\mathrm{MPa \cdot m^{0.5} s^{-1}}$[1] during the initial elastic deformation. Stress intensity factors greater than 3 000 $\mathrm{MPa \cdot m^{0.5} s^{-1}}$ are covered in Annex A. These rates are greater than those permitted in BS 7448-1.

The definition of fracture toughness values relevant to particular structural integrity assessments is outside the scope of this British Standard.

NOTE This standard does not cover integrity assessments. Such assessments are covered in BS 7910.

2 Normative references

The following referenced documents are indispensable for the application of this document. For dated references, only the edition cited applies. For undated references, the latest edition of the referenced document (including any amendments) applies.

BS 7448-4:1997*, Fracture mechanics toughness tests — Part 4: Method for determination of fracture resistance curves and initiation values for stable crack extension in metallic materials.*

BS 7935-1*, Constant amplitude dynamic force calibration — Part 1: Calibration and verification of non-resonant uniaxial dynamic testing systems — Method.*

BS 7935-2*, Constant amplitude dynamic force calibration — Part 2: Calibration of the calibration device instrumentation to be used for the dynamic calibration of non-resonant uniaxial dynamic testing systems — Method.*

BS EN ISO 7500-1:1999*, Metallic materials — Verification of static uniaxial testing machines — Part 1: Tension/compression testing machines — Verification and calibration of the force-measuring system.*

BS EN ISO 12737*, Metallic materials — Determination of plane-strain fracture toughness.*

3 Terms and definitions

For the purposes of this part of BS 7448 the following terms and definitions apply.

3.1
stress intensity factor
K
magnitude of the stress field near the crack tip (a stress-field singularity) (see **3.2**) in a homogeneous, ideally linear-elastic body

NOTE This is a function of applied force, crack length and specimen geometry, and is expressed in units of $\mathrm{MPa \cdot m^{0.5}}$.

3.2
opening mode
opening displacement of the crack surfaces in a direction normal to the original (undeformed) crack plane near the crack tip

3.3
plane strain fracture toughness
K_{Ic}
measure of a material's resistance to crack extension when the stress state near the crack tip is predominantly plane strain, plastic deformation is limited, and opening mode monotonic loading is applied

3.4
maximum fatigue stress intensity factor
K_{f}
maximum value of opening mode stress intensity factor which is applied during the final stages of fatigue crack extension

---

[1] 1 $\mathrm{N.mm^{-1.5}} = 0.0316\ \mathrm{MPa \cdot m^{0.5}} = 0.0316\ \mathrm{MN \cdot m^{1.5}}$.

3.5
crack tip opening displacement
CTOD

displacement of the crack surfaces normal to the original (undeformed) crack plane at the tip of the fatigue precrack, expressed in millimetres

3.6
critical CTOD

value of CTOD associated with a particular type of crack extension

3.7
***J*-integral**

mathematical expression, a line or surface integral that encloses the crack front from one crack surface to the other, used to characterize the local stress-strain field around the crack front, expressed in J/mm^2

NOTE 1 J/mm^2 = 1 MJ/m^2 = 1 N/mm.

3.8
J

experimental equivalent of the *J*-integral

3.9
critical *J*

particular value of *J*

3.10
brittle crack extension

abrupt crack extension which occurs with or without prior stable crack extension (see **3.11**)

3.11
stable crack extension

slow stable crack extension that includes the stretch zone width (see **3.12**)

3.12
stretch zone width
SZW

length of crack extension that occurs during crack tip blunting; that is, prior to the onset of brittle crack extension, pop-in (see **3.13**) or slow stable crack extension.

NOTE The SZW is [measured] in the same plane as the fatigue precrack.

3.13
pop-in

discontinuity in the force versus displacement record

NOTE A pop-in corresponds to a sudden increase in displacement, and, generally, a sudden decrease in force. Subsequently, the displacement and force increase to above their respective values at pop-in.

4 Symbols and designations

For the purposes of this part of BS 7448 the following symbols and designations apply.

a	crack length or, for the purposes of fatigue precracking (see **7.4.4** and **7.4.5**), an assumed value $\leq a_o$, in millimetres
a_o	average original crack length (see **9.7.1**), in millimetres
B	specimen thickness, in millimetres
B_N	net specimen thickness between sidegroove tips, in millimetres
C	total width of compact specimen, in millimetres
D	ram displacement in dynamic tensile test, in millimetres
$\dot{D}$	ram displacement rate in dynamic tensile test, in millimetres per second
E	Young's modulus of elasticity at the temperature of interest, in GPa
f	a mathematical function of (a/W) or (a_o/W) for bend specimens
f'	a mathematical function of (a/W) or (a_o/W) for compact specimens
f_1	electrical frequency at which the output signal amplitude is reduced by 10 %, in hertz
f_2	electrical frequency at which the output signal amplitude is reduced by 30 %, in hertz
F	applied force, in kilonewtons
$\dot{F}$	rate of change of applied force with time, in kilonewtons per second
F_c	applied force at the onset of brittle crack extension or pop-in when Δa is less than 0.2 mm, in kilonewtons
F_e	applied force at which permanent plastic deformation is first observed in dynamic tensile test, in kilonewtons
F_f	maximum fatigue precracking force during the final stages of fatigue crack extension (see **7.4.4** and **7.4.5**), in kilonewtons
F_m	applied force at the first attainment of a maximum force plateau for fully plastic behaviour, in kilonewtons
F_r	applied force at intersection of force versus displacement record in dynamic tensile test with 0.2 % offset line, in kilonewtons
F_u	applied force at the onset of brittle crack extension or pop-in when the event is preceded by Δa equal to or greater than 0.2 mm, in kilonewtons
F_A	applied force (in kilonewtons) at which the nominal stress equals: $\dfrac{B\sigma_{\mathrm{USD}}(W-a_o)^2}{S}$ for a bend specimen; and $\dfrac{0.75B\sigma_{\mathrm{YSD}}(W-a_o)^2}{(2W+a_o)}$ for a compact specimen
F_{TS}	maximum applied force observed after yield or plastic deformation in a dynamic tensile test, in kilonewtons
J	experimental equivalent of the crack tip J-integral, in megajoules per square metre
J_c	critical J at the onset of brittle crack extension or pop-in when $\Delta a < 0.2$ mm, in megajoules per square metre
J_{corr}	critical J where there is evidence of stable crack extension $\Delta a > 0.2$ mm, in megajoules per square metre

J_m	critical J at the first attainment of a maximum force plateau for fully plastic behaviour, in megajoules per square metre
$\dot{J}_p$	rate of change of the plastic component of the J-integral with time, in megajoules per square metre per second
J_u	critical J at the onset of brittle crack extension or pop-in when the event is preceded by $\Delta a \geq 0.2$ mm, in megajoules per square metre
K	stress intensity factor, in MPa·m$^{0.5}$
$\dot{K}$	rate of change of K with time, in MPa·m$^{0.5}$s^{-1}
K_{Ic}	plane strain fracture toughness, in MPa·m$^{0.5}$
K_f	fatigue stress intensity factor applied during the final stages of fatigue crack extension, in MPa·m$^{0.5}$
K_Q	a provisional value of K_{Ic}, in MPa·m$^{0.5}$
L_c	parallel length of tensile specimen, in millimetres
L_e	extensometer gauge length of tensile specimen, in millimetres
q	displacement of bend specimen or stepped notch compact specimen along the load-line, in millimetres
$\dot{q}$	rate of change of q with time, in millimetres per second
q_c	value of q at the onset of brittle crack extension or pop-in when $\Delta a < 0.2$ mm, in millimetres
q_e	elastic component of q, in millimetres
q_m	value of q at the first attainment of a maximum force plateau for fully plastic behaviour, in millimetres
q_p	plastic component of q corresponding to F_c, F_u or F_m, in millimetres
q_u	value of q at the onset of brittle crack extension or pop-in when the event is preceded by $\Delta a \geq 0.2$ mm, in millimetres
R	fatigue force ratio, i.e. the algebraic ratio of minimum to maximum fatigue precracking force during any single cycle of fatigue operation
S	span between outer loading points in three point bend test, in millimetres
S_o	original cross sectional area of tensile specimen, in square millimetres
SZW	stretch zone width, in millimetres
t_a	time interval for linear part of force/time record, in seconds
t_e	time interval for elastic deformation during fracture toughness determination, in seconds
t_f	test specimen failure time interval, in seconds
t_p	time interval for plastic deformation of the test specimen, in seconds
t_r	rise time interval, in seconds
T	test temperature, in degrees celsius
U	total area under plot of force F versus load point displacement, in joules
U_e	elastic component of area under plot of force F versus load point displacement, in joules
U_p	plastic component of area under plot of force F versus load point displacement, in joules
G_t	total area under plot of force F versus time, in kilonewton-seconds
V	notch opening displacement at or near to notch mouth ($V = q$ in a stepped notch compact specimen), in millimetres
V_c	value of V at the onset of brittle crack extension or pop-in when Δa is less than 0.2 mm, in millimetres

V_e	elastic crack mouth opening displacement at critical force, in millimetres
V_m	value of V at the first attainment of a maximum force plateau for fully plastic behaviour, in millimetres
V_p	plastic component of V corresponding to F_c, F_u or F_m, in millimetres
V_u	value of V at the onset of brittle crack extension or pop-in when this is preceded by Δa equal to or greater than 0.2 mm, in millimetres
W	effective width of test specimen, in millimetres
X,Y,Z	crack plane orientation symbols
y	half the distance between the knife edge fixing points, in millimetres
z	distance of the notch opening gauge location above the surface of specimen, in millimetres
δ	crack tip opening displacement (CTOD)
δ_c	critical CTOD at the onset of brittle crack extension or pop-in when $\Delta a < 0.2$ mm, in millimetres
δ_{corr}	critical CTOD where there is evidence of stable crack extension $\Delta a > 0.2$ mm, in millimetres
δ_m	critical CTOD at the first attainment of a maximum force plateau for fully plastic behaviour, in millimetres
δ_p	plastic component of crack tip opening displacement, in millimetres
$\dot{\delta}_p$	rate of change in the plastic component of crack tip opening displacement with time, in millimetres per second
δ_u	critical CTOD at the onset of brittle crack extension or pop-in when the event is preceded by $\Delta a \geq 0.2$ mm, in millimetres
Δa	average stable crack extension, including SZW (see **9.7.3**), in millimetres
ΔK	the difference between the maximum and minimum values of K during any single cycle of fatigue precracking, in $\text{MPa}\cdot\text{m}^{0.5}$
Δp	load point displacement during plastic deformation of the test piece, in millimetres
$\dot{\varepsilon}$	strain rate to be applied during the determination of the dynamic 0.2 % proof strength (see Annex E), per second
v	Poisson's ratio
η_p	plasticity factor used for J-integral determination
σ_{TSP}	tensile strength at the temperature of fatigue precracking, in MPa
σ_{YS}	0.2 % proof strength at the temperature of the fracture test2), in MPa
σ_{YSD}	0.2 % proof strength at the temperature and loading rate of the fracture test, in MPa
σ_{YSP}	0.2 % proof strength at the temperature of fatigue precracking, in MPa
σ_{USD}	Tensile strength at the temperature and loading rate of the fracture test, in MPa

5 Principle

Fracture toughness tests are performed in two main stages. Firstly, a fatigue crack is produced in a notched specimen by applying an alternating force. Secondly, further crack extension is caused by applying an increasing displacement to the specimen. Specimens suitable for the displacement to be applied either by bending or by tension are specified.

During the second stage, force and displacement are measured with respect to time in order to provide the rates of application of force and displacement and also to enable a record of force versus displacement to be made.

NOTE A force/time record only is required for the method given in Annex A.

---

2) At present no British Standard exists for the measurement of tensile properties below ambient temperature or at high rates. However, in this standard, a satisfactory method of determining high rate tensile properties is given in Annex E, and guidance on performing low temperature tensile testing can be found in ISO 15579. In these cases the values to be used are subject to agreement between interested parties.

If negligible plastic deformation prior to crack extension is indicated then a plane strain fracture toughness value K_{Ic} is determined from the critical force. If the criteria for K_{Ic} are not met then elastic plastic fracture toughness values of crack tip opening displacement (CTOD) or J are determined from the critical displacement or deformation energy respectively, as indicated in Figure 1.

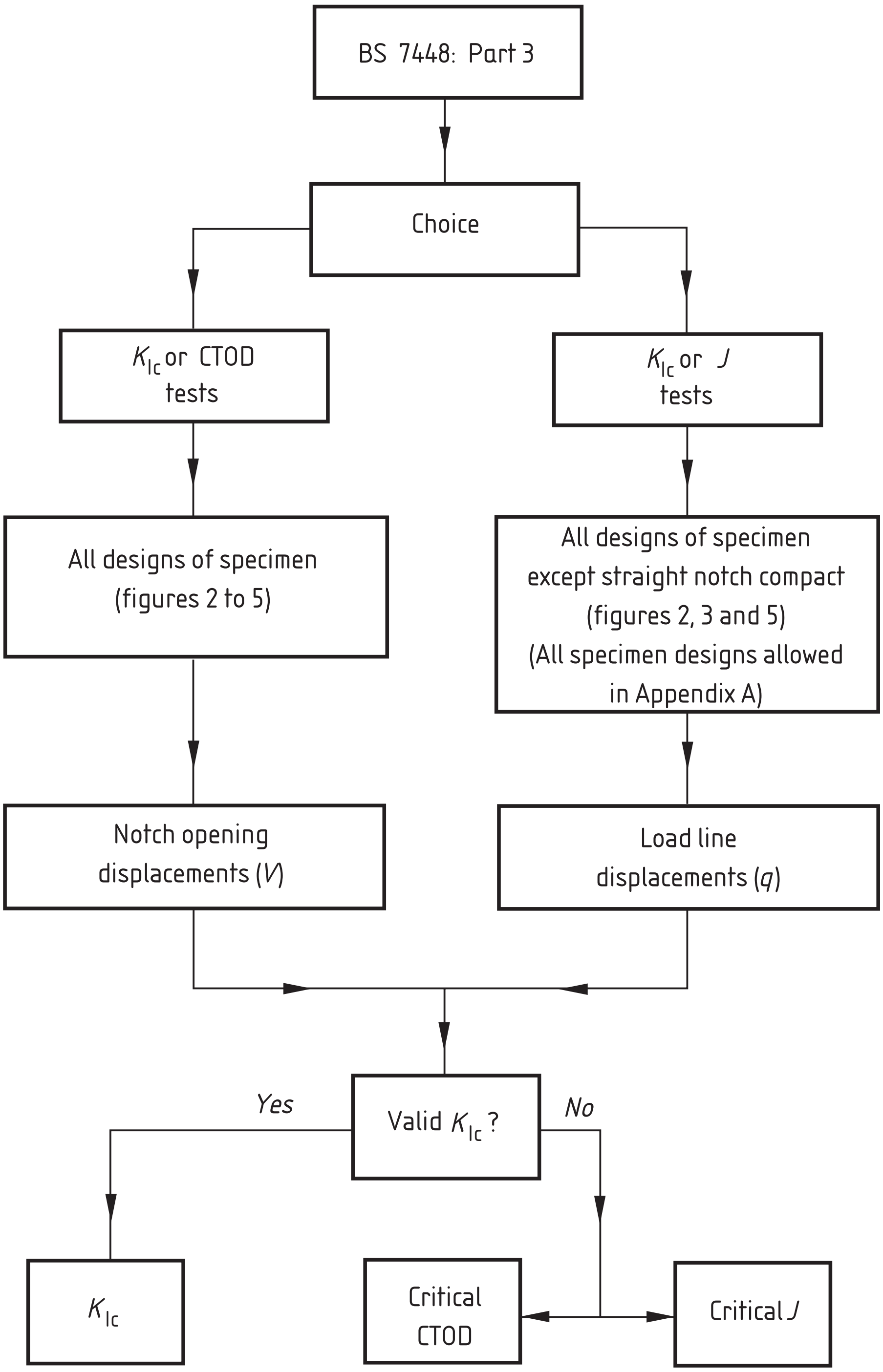

Figure 1 — Flow chart for the choice of fracture toughness parameter, specimen design and displacement measurement

6 Test specimens

6.1 General

6.1.1 Each specimen shall be of one of the following designs (see **6.2**):

a) rectangular cross-section three point bend (see Figure 2);

b) square cross-section three point bend (see Figure 3);

c) straight notch compact (see Figure 4);

d) stepped notch compact (see Figure 5).

NOTE Specimens having *W*/*B* ratios greater than 2 have an increased tendency to buckle.

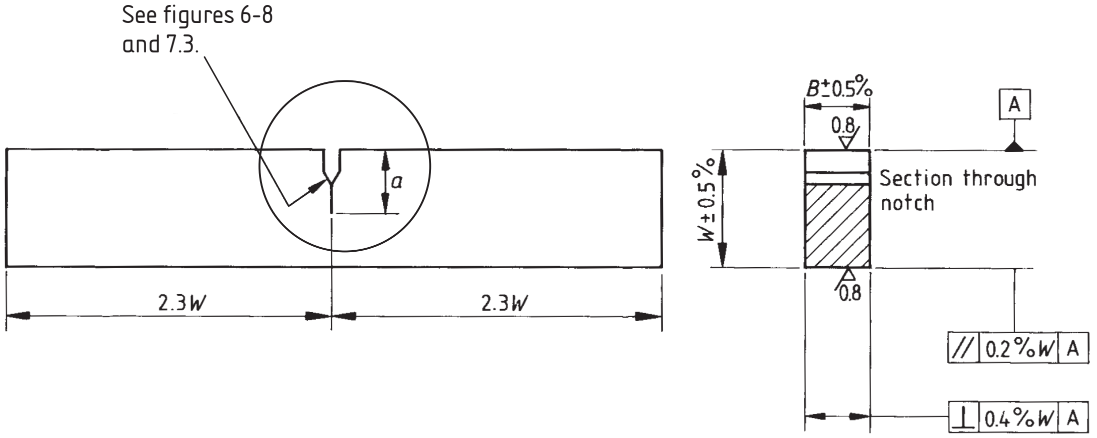

Key

B specimen thickness (see **6.1**)

W effective width of the test specimen ($W = 2B$), or if agreed by the parties concerned, a width thickness ratio in the range, $1.0 < W/B \leq 4.0$

a crack length ($0.45W \leq a \leq 0.55W$)

Figure 2 — Proportional dimensions and tolerances for the rectangular section bend specimen

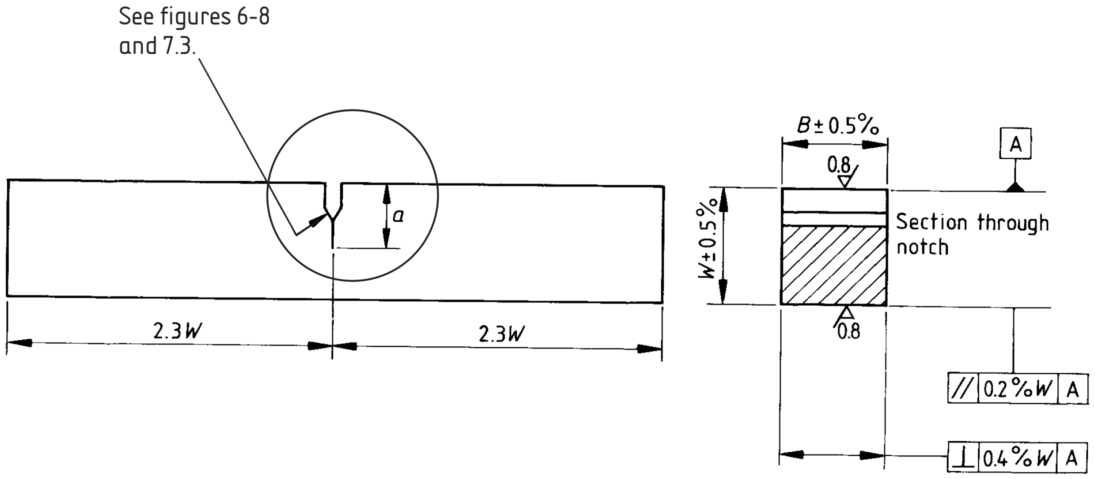

Key

B specimen thickness (see **6.1**)

W effective width of the test specimen ($W = B$)

a crack length ($0.45W \le a \le 0.55W$)

Figure 3 — Proportional dimensions and tolerances for the square section bend specimen

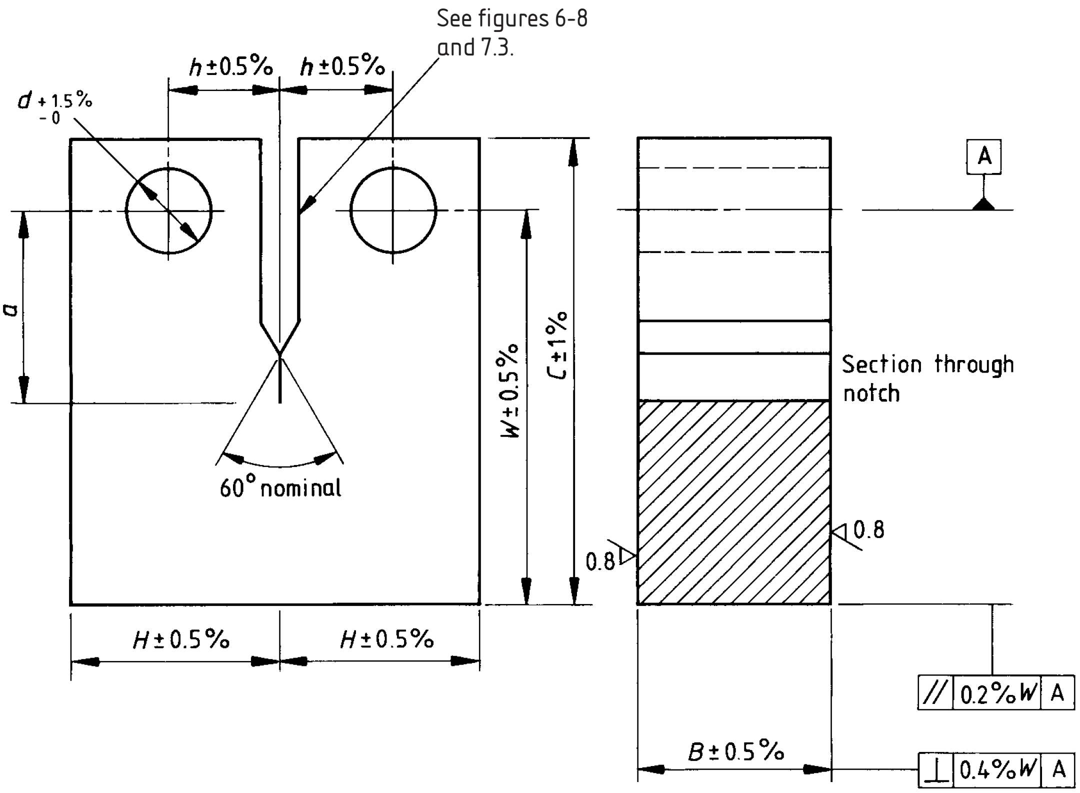

Key

B	specimen thickness
W	effective width of the test specimen ($W = 2B$) (see Note to **6.1**)
C	total width of compact specimen ($C \geq 1.25W$)
d	hole diameter ($d = 0.25W$)
h	half distance between holes ($h = 0.27W$)
H	half height ($H = 0.6W$)
a	crack length ($0.45W \leq a \leq 0.55W$)

Figure 4 — Proportional dimensions and tolerances for the straight notch compact specimen

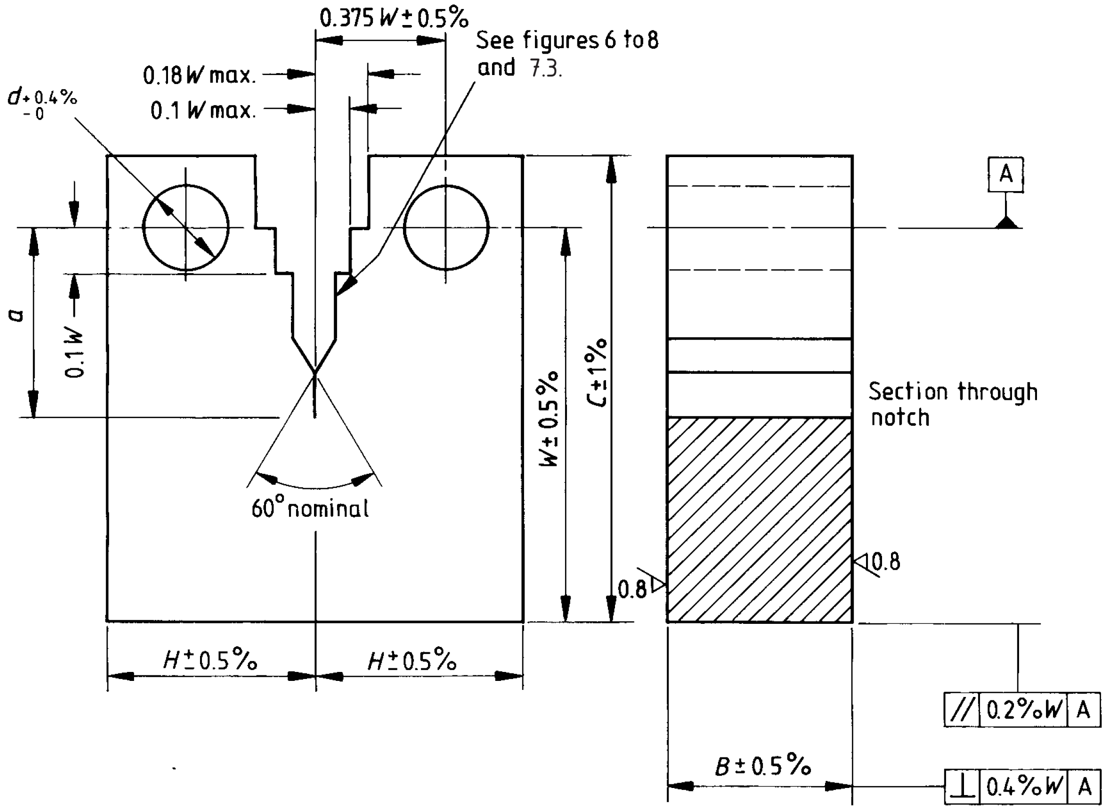

Key

B	specimen thickness
W	effective width of the test specimen ($W = 2B$) (see **6.1**), or if agreed by the parties concerned, a width thickness ratio in the range, $1.0 < W/B \le 4.0$
C	total width of compact specimen ($C \ge 1.25W$)
d	hole diameter ($d = 0.25W$)
H	half height ($H = 0.6W$)
a	crack length ($0.45W \le a \le 0.55W$)

Figure 5 — Proportional dimensions and tolerances for the stepped notch compact specimen

6.1.2 The test specimen shall have either the dimension *B* equal to the full thickness of the material to be tested, provided that they are reported (see Clause **12**), test specimens having thicknesses less than the test material (sub-size and/or sidegrooved specimens) can be used in one or more of the following circumstances:

a) when a particular combination of specimen design, material and temperature has been demonstrated to give values of fracture toughness that are independent of specimen thickness.

NOTE 1 This circumstance can apply when the specimen has adequate thickness to give a valid K_{Ic} value (see **6.3** and Table 1).

Table 1 — Dimensions of specimens that can lead to valid K_{Ic} values

$\frac{\sigma_{\mathrm{YSD}}}{E}$		**Crack length a, or thickness B or ligament $W - a$** mm
Over	**Up to and including**	
—	0.0050	100
0.0050	0.0057	75
0.0057	0.0062	63
0.0062	0.0065	50
0.0065	0.0071	38
0.0071	0.0080	25
0.0080	0.0095	13
0.0095	—	6.5

b) when there is an established correlation between full specimen thickness and sub-size specimens tested;

c) when no value of thickness is given in a product specification; in this case the specimen dimension B shall be as thick as possible;

NOTE 2 Sub-size and/or sidegrooved specimens might give values of fracture toughness different to those associated with full thickness specimens.

d) when sidegrooved specimens are used, an effective specimen thickness of $\sqrt{BB_{\mathrm{N}}}$ shall be used in the calculation of K and the elastic components of CTOD and J; the net section thickness B_{N} shall be used in the calculation of the plastic component of J.

6.1.3 The notch profile shall be such that it is within the envelope shown in Figure 6a).

One of the following notch configurations shall be used:

a) When a milled notch is used, in order to expedite fatigue precracking, the notch root radius shall be not greater than 0.10 mm.

b) When a sawn, disc ground or spark eroded notch is used, the notch tip shall have a width of not greater than 0.15 mm.

c) If fatigue crack initiation and/or propagation are difficult to control (see **7.4.6**), a chevron notch configuration as shown in Figure 7 may be used. When a chevron notch is used, the root radius shall be not greater than 0.25 mm.

The plane of the notch shall be perpendicular to the specimen surfaces to ±2°. When required, knife edges shall be machined into the specimen or attached and shall be one of the types shown in Figure 8, and Figure 9. The dimension $2x$ shall be within the working range of the notch opening displacement gauge. The knife edges shall be square with the specimen surfaces and parallel to within 0.5°. For all types of knife edge, the notch opening displacement gauge shall be free to rotate about the points of contact between the gauge and knife edge.

NOTE 3 For this reason when inward pointing knife edges or razor blades are used, it may be necessary to use an enlarged notch mouth, as shown in Figure 6 and Figure 9 (see **6.2.1**).

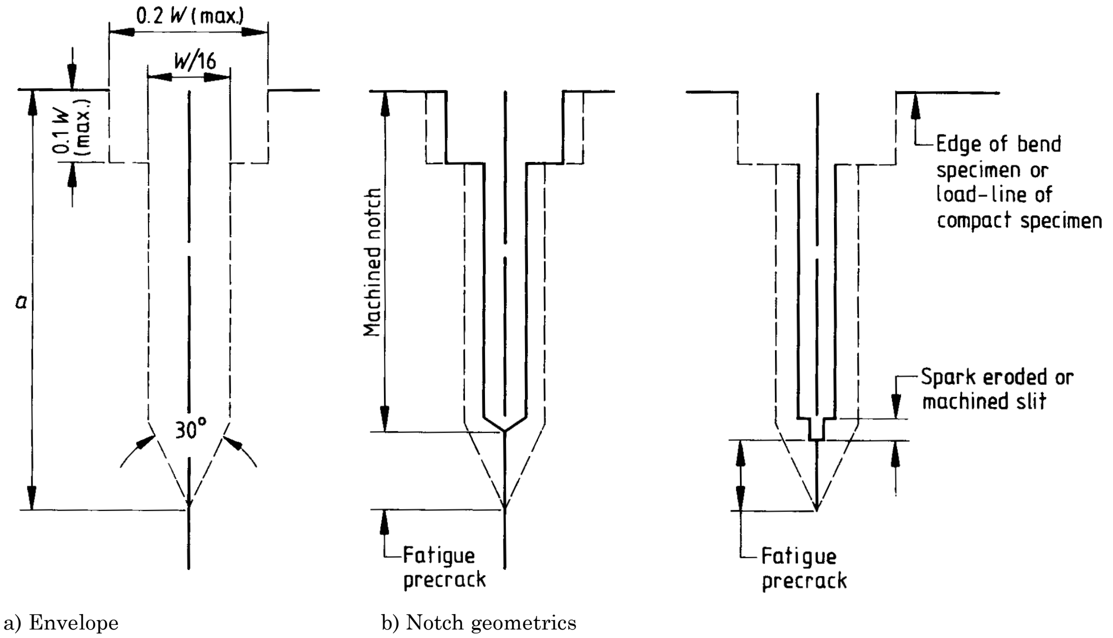

a) Envelope b) Notch geometrics

Figure 6 — Acceptable fatigue crack starter notches and fatigue crack configurations

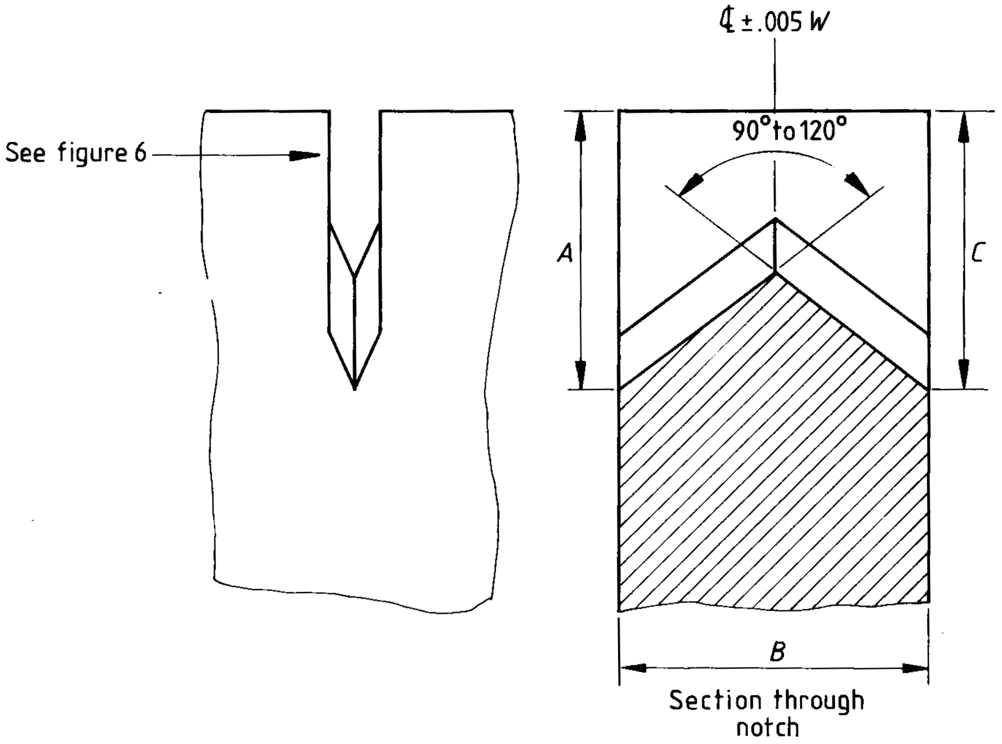

NOTE 1 $A_1 = A_2$, within 0.010*W*.

NOTE 2 Cutter tip angle 90° max.

Figure 7 — Chevron notch

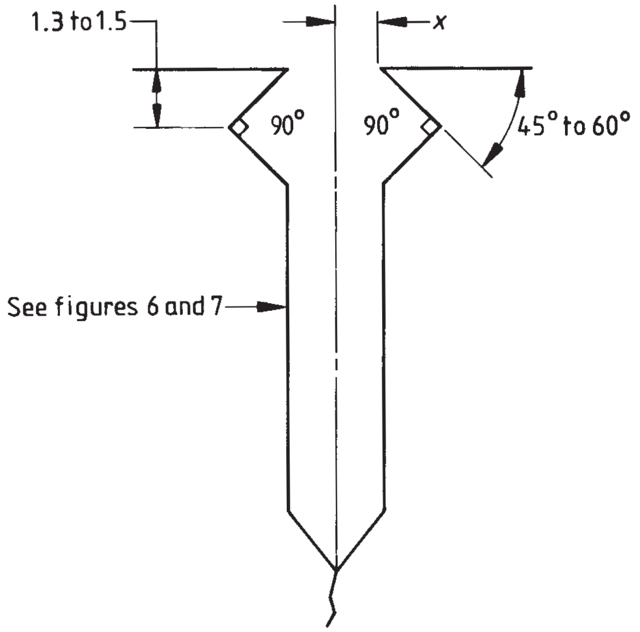

(a) Integral type

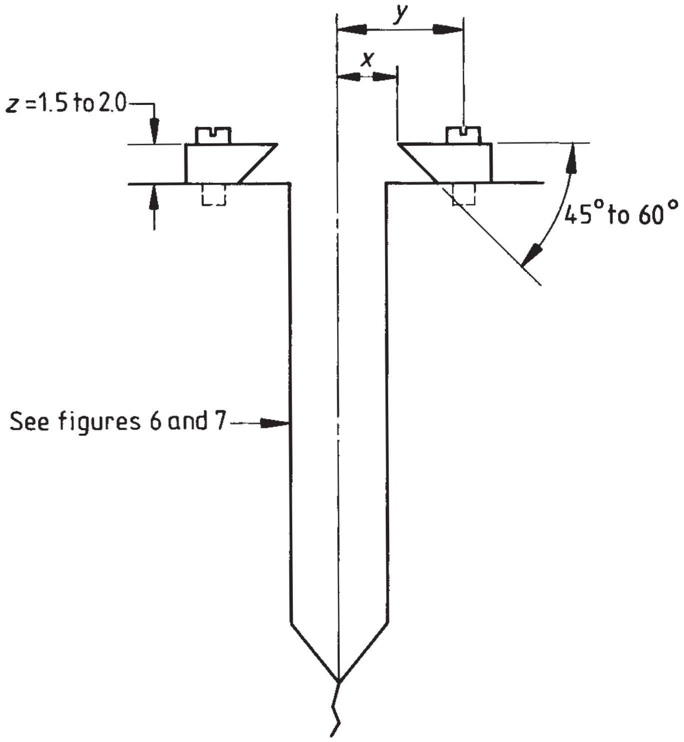

(b) Attached type

$2x \leq W/2$

$2y$ + screw thread diameter $\leq W/2$

NOTE If the knife edges are glued or similarly attached to the edge of the specimen, $2y$ is the distance between points of attachment

Figure 8 — Outward pointing knife edges and corresponding notch geometrics

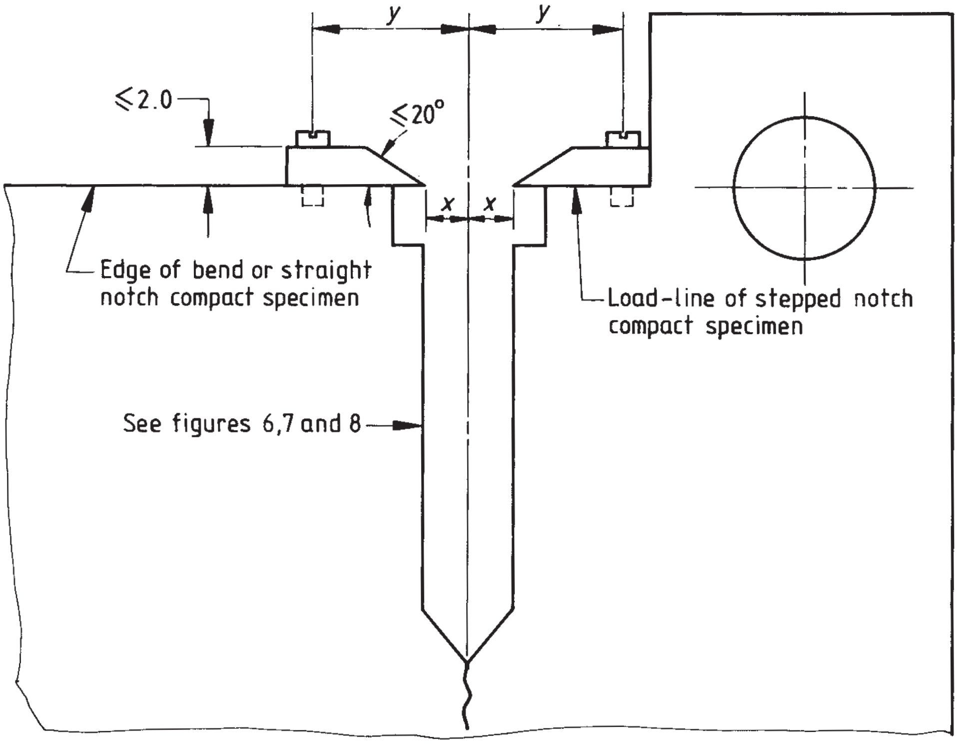

$2x \leq W/2$

$2y$ + screw thread diameter $\leq W/2$

NOTE 1 If the knife edges are glued or similarly attached to the edge of the specimen, $2y$ is the distance between points of attachment

NOTE 2 If razor blades are used instead of inward pointing knife edges, the displacement is normally measured at a point half the razor blade thickness above the load line (see **9.1.4**).

Figure 9 — Outward pointing knife edges and corresponding notch geometrics

6.2 Choice of specimen design

6.2.1 The choice of specimen design shall be appropriate for the likely outcome of the test (see **6.3**), and preference for critical CTOD or critical J fracture toughness values (see **10.1**), and the crack plane orientation to be used in the test (see **7.2**).

NOTE 1 As indicated in Figure 1, all four designs of specimen (see Figure 2, Figure 3, Figure 4 and Figure 5) are suitable for the determination of K_{Ic} and critical CTOD values. Rectangular and square section bend specimens (see Figure 2 and Figure 3) are suitable for the determination of critical J values using the methods for direct and indirect measurement of load-line displacement given in Annex B. The stepped notch compact specimen (see Figure 5) with integral or inward pointing knife edges (see Figure 8a) and Figure 9) is suitable for the determination of critical J values. The straight notch compact specimen (see Figure 4) is not suitable for the determination of critical J values. Bend and compact specimens may be used for the determination of K_{Ic}, critical CTOD and critical J values using the abbreviated method given in Annex A.

NOTE 2 When notch opening displacement V is measured on the load-line, $V = q$ for a stepped notched compact specimen (see Figure 9) which is equally useful for the determination of K_{Ic}, critical CTOD and critical J values (see **10.1**).

NOTE 3 A compact specimen requires less material than a bend specimen, but requires more machining and more complicated fixtures for fatigue precracking and testing.

NOTE 4 For tests on a rectangular section (see **7.2** and Annex C) it is normal (see **6.1.2**) to use a rectangular cross-section bend specimen (see Figure 2) or a compact specimen (see Figure 4 and Figure 5) for through thickness crack orientations (see X-Y and Y-X in Annex C). It is also normal (see **6.1.2**) to use a square cross-section bend specimen (see Figure 3) for surface crack orientations (see X-Z and Y-X in Annex C).

6.3 Specimen dimensions necessary for determination of K_{Ic}

In order to determine a K_{Ic} value, which depends on the shape of the force versus displacement record (see **10.2**), the specimen size and form, the 0.2 % proof strength σ_{YSD} and toughness of the material at the loading rate and temperature of interest, the specimen shall have a crack length a, thickness B and the uncracked ligament $(W - a)$ each not less than $2.5(K_{Ic}/\sigma_{YSD})^2$.

This requirement shall be used to estimate the specimen size (full size or sub-size) for a K_{Ic} result, based on either of the following:

a) an estimate of the K_{Ic} of the material;

b) the ratio of the 0.2 % proof strength (σ_{YSD}) to Young's modulus (E), as given in Table 1 (if σ_{YSD} is not known, σ_{YS} may be used).

7 Specimen preparation and fatigue precracking

7.1 Material condition

The material condition can affect its fracture toughness, therefore the condition of the specimens shall be recorded in the test report (see Clause **12**).

7.2 Crack plane orientation

The orientation of the crack plane shall be decided before machining (see **7.3**), identified in accordance with the co-ordinate systems in Annex C, and recorded (see Clause **12**).

NOTE The fracture toughness of a material is usually dependent on the orientation and direction of propagation of the crack in relation to the principal directions of mechanical working or grain flow.

7.3 Machining

The sizes, shapes, dimensional tolerances and surface finishes for the specimens shall be as given in Figure 2, Figure 3, Figure 4 and Figure 5. Details of notches shall be as given in Figure 6, Figure 7 and Figure 8a).

7.3.1 *Sidegrooving*

Where side grooving is specified this shall be conducted in accordance with the requirements of BS 7448-4:1997.

7.4 Fatigue precracking

7.4.1 Fatigue precracking shall be performed at room temperature with the test specimen in the finally heat-treated, mechanically worked or environmentally conditioned state, unless a particular fatigue precracking temperature and intermediate treatments between fatigue precracking and testing are required to simulate the conditions for a specific structural application.

7.4.2 Measure the specimen thickness B and width W as described in **9.1.2** and **9.1.3** respectively. The measured values of B and W shall be recorded and used to determine the maximum fatigue precracking force F_f according to **7.4.4** or **7.4.5**.

7.4.3 The fatigue precracking force shall be measured to an accuracy of ±2.5 %.

7.4.4 For the three point bend specimens illustrated in Figure 2 and Figure 3, the maximum fatigue precracking force F_f during the final 1.3 mm or 50 % of precrack extension (see **7.4.6**), whichever is less, shall be the lower of the following:

a) $F_f = \dfrac{B(W-a)^2(\sigma_{YSP} + \sigma_{TSP})}{4S}$

b) a force corresponding to $\dfrac{\Delta K}{E} = 3.2 \times 10^{-4} m^{0.5}$

c) $F_f = \dfrac{K_f B W^{1.5}}{S \times f\left(\dfrac{a}{W}\right)}$, in tests that give valid in tests that give valid K_{Ic} values (see **6.3** and **10.2**), where

$K_f = 0.6 \left(\frac{\sigma_{YSP}}{\sigma_{YSD}}\right) K_Q$;

K_Q is the provisional value of K_{Ic}, determined according to **10.2.3.2**;

a is an assumed crack length $\leq a_o$;

$f(a/W)$ is given by Equation (2) in **10.2.3.2**, and in tabular form in Table 2.

Table 2 — Values of for $f\left(\frac{a}{W}\right)$ three point bend specimens

$\frac{a}{W}$	$f\left(\frac{a}{W}\right)$	$\frac{a}{W}$	$f\left(\frac{a}{W}\right)$
0.450	2.29	0.500	2.66
0.455	2.32	0.505	2.70
0.460	2.35	0.510	2.75
0.465	2.39	0.515	2.79
0.470	2.43	0.520	2.84
0.475	2.46	0.525	2.89
0.480	2.49	0.530	2.94
0.485	2.54	0.535	2.99
0.490	2.58	0.540	3.04
0.495	2.62	0.545	3.09
		0.550	3.14

7.4.5 For the compact specimens illustrated in Figure 4 and Figure 5, the maximum precracking force F_f during the final 1.3 mm or 50 % of precracked extension (see **7.4.6**), whichever is less, shall be the lower of the following:

a) $F_f = \dfrac{0.2B(W-a)^2(\sigma_{YSP}+\sigma_{TSP})}{(2W+a)}$;

b) a force such that $\dfrac{\Delta K}{E} = 3.2 \times 10^{-4}\text{m}^{0.5}$;

c) $F_f = \dfrac{K_f B W^{0.5}}{f\left(\frac{a}{W}\right)}$ in tests that give valid K_{Ic} values (see **6.3** and **10.2**);

where

$K_f = 0.6 \left(\frac{\sigma_{YSP}}{\sigma_{YSD}}\right) K_Q$;

K_Q is the provisional value of K_{Ic}, determined according to **10.2.3.3**;

a is an assumed crack length $\leq a_o$;

$f'(a/W)$ is given by Equation (4) in **10.2.3.3**, and in tabular form in Table 3.

Table 3 — Values of for $f'\left(\frac{a}{W}\right)$ compact specimens

$\frac{a}{W}$	$\left(\frac{a}{W}\right)$	$\frac{a}{W}$	$\left(\frac{a}{W}\right)$
0.450	8.34	0.500	9.66
0.455	8.46	0.505	9.81
0.460	8.58	0.510	9.96
0.465	8.70	0.515	10.12
0.470	8.83	0.520	10.29
0.475	8.96	0.525	10.45
0.480	9.09	0.530	10.63
0.485	9.23	0.535	10.80
0.490	9.37	0.540	10.98
0.495	9.51	0.545	11.17
		0.550	11.36

7.4.6 A fatigue crack of restricted shape and size shall be developed from the tip of the notch in the specimen as follows.

a) For the initial fatigue precrack extension, the maximum force shall not exceed 1.3 F_f. The fatigue force ratio R shall be in the range 0 to 0.1.

NOTE To expedite crack initiation, one or more cycles of opposite sign and equal to or lower magnitude force may be applied first.

b) For all four designs of specimen (see Figure 2, Figure 3, Figure 4 and Figure 5), the ratio a/W shall be in the range 0.45 to 0.55 (see **9.7**).

c) The minimum fatigue crack extension shall be the larger of 1.3 mm or 2.5 % of the specimen width W (see **9.7**).

d) The difference between the two crack length measurements on the surfaces of the specimen, measured to ±0.05 mm, shall not exceed 15 % of the average of the two measurements.

e) The crack tip shall be within a limiting envelope as shown in Figure 6. The plane of the fatigue precrack shall always be within 10° of the intended plane of crack extension (see **6.1.3** and **9.7**).

8 Test equipment

8.1 General

The calibration of measuring apparatus shall be traceable to national or international standards of measurement which, in the UK, are the responsibility of the National Physical Laboratory.

NOTE This includes automatic equipment used for the determination of any one of the parameters described in this standard.

8.2 *Machine for force application*, capable of applying force at rates high enough to achieve the required stress intensity factor rates $\dot{K}$ (see **9.6**), and maintain the displacement rate that results in the required $\dot{K}$ for the duration of the test.

NOTE Users of fast servo-hydraulic machines may choose between a preload and a standoff when conducting the test. A small preload of about 2 % of the expected failure load may be applied to the specimen before dynamic loading. This has the advantage of reducing oscillations on the force and clip gauge outputs, which greatly increase the probability of obtaining acceptable traces. The disadvantage of this technique is that the stress intensity rate varies throughout the test. This method is not recommended for use with the method described in Annex A. The use of a standoff has the advantage of allowing the machine actuator to accelerate to a constant velocity. However the use of this method is more likely to introduce unacceptable oscillations on the traces.

8.3 *System of combined force sensing and recording*, capable of recording the force signal against the displacement of the test specimen, and conforming to the requirements of grade 1.0 of BS EN ISO 7500-1:1999. Calibration of the force sensing equipment shall conform to BS 7935-1 and -2 as appropriate.

NOTE Electrical and/or mechanical attenuation restrictions to the measuring system are given in Annex D.

8.4 *Displacement measuring devices*, which allow free rotation of the points of contact between the gauge and knife edges or specimens.

NOTE Electrical and/or mechanical attenuation restrictions to the measuring system are given in Annex D.

8.5 *Gauge*, with an electrical output that represents the displacement (V or q) that occurs during the test. The response of the gauge shall be such that the deviation from true displacement shall be within ±1 % of the recorded value. The gauge shall be calibrated before each determination, except where identical specimens and conditions are used, when less frequent calibration may be agreed between the parties concerned.

NOTE 1 The procedure outlined in BS EN 10002-4 for calibration either in a rig or using an elastic device, should be used for checking the response of the gauge, but other methods capable of the same accuracy are not excluded. Calibration is of particular importance for low temperature tests, where a gauge is most likely to give spurious readings. When the gauge is well insulated from the specimen, an ambient temperature calibration is usually adequate.

NOTE 2 The distance between the force measuring device and the crack mouth opening gauge causes their outputs to be slightly out of phase. This is related to the stress wave transmission speed. For tests conducted within the limitation of this standard, any resulting errors are insignificant and may be ignored. This anomaly does not occur when the method described in Annex A is used.

NOTE 3 Because of the loss of accuracy of the gauge at notch opening displacement rates in excess of 150 mm/s and stress intensity factor rates higher than 3 000 $\text{MPa}\cdot\text{m}^{0.5}\ \text{s}^{-1}$, gauges of the type recommended in BS 7448-1 should not be used at rates above these values.

8.6 *Monitoring and recording equipment*, with a response time of less than 20 % of the rise time interval of the input signal.

NOTE Methods that may be used to check this are given in Annex D.

Where time interval is being recorded, it shall be accurate to ±1 % of the reading.

8.7 *Thermocouple or platinum resistance thermometer*.

8.8 Testing fixtures

8.8.1 For three point bend specimens (see Figure 2 and Figure 3), *a loading fixture*, designed to reduce friction at the loading points to a minimum. This shall be achieved by allowing the rollers to rotate and move apart slightly, thus maintaining rolling contact throughout the test. The diameter of the rollers shall be between W and $W/2$.

NOTE A design that has proved satisfactory is shown in Figure 10.

8.8.2 For compact specimens, *a clevis and pin arrangement*, designed to minimize friction, loaded in tension.

NOTE Designs of clevis that have proved satisfactory is shown in Figure 11 and Figure 12.

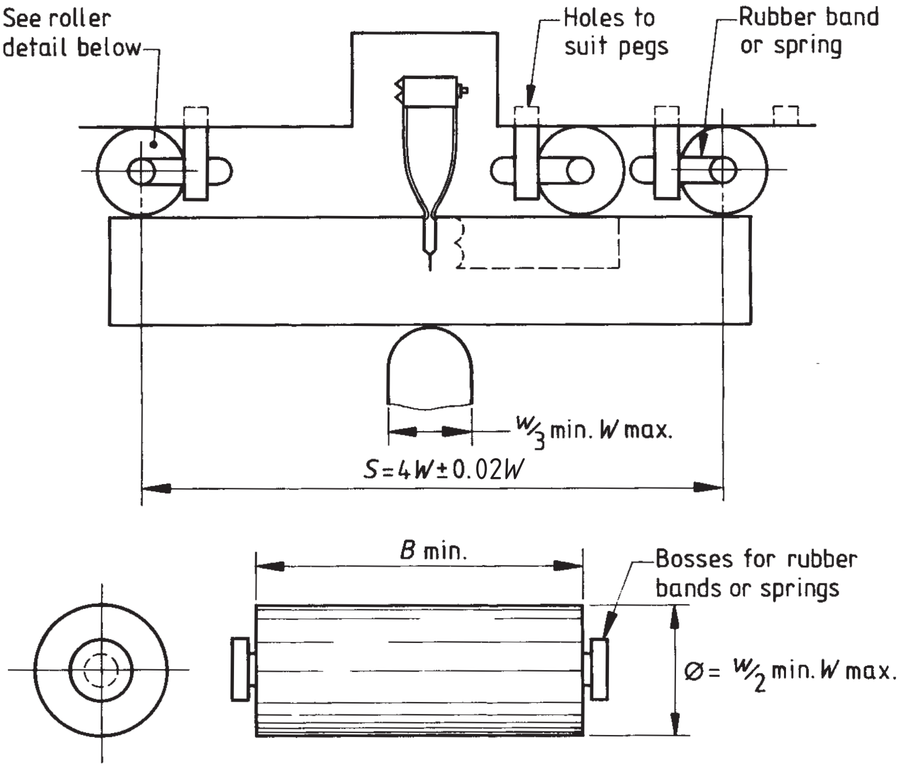

Figure 10 — Fixture for three point bend tests

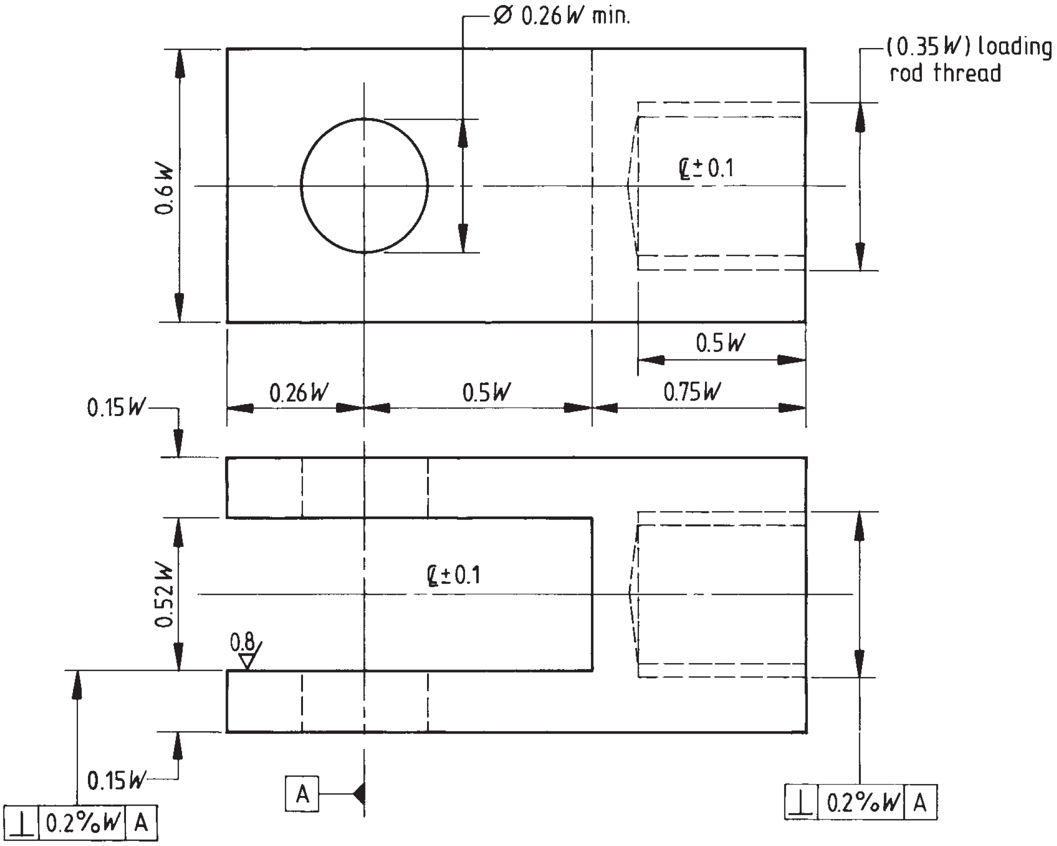

Figure 11 — Typical design of clevis for applying a tensile force to a compact specimen using a circular hole in the clevis and a pin having a diameter of $(0.24^{-0.005}_{-0.015})\,W$

(see Figure 12)

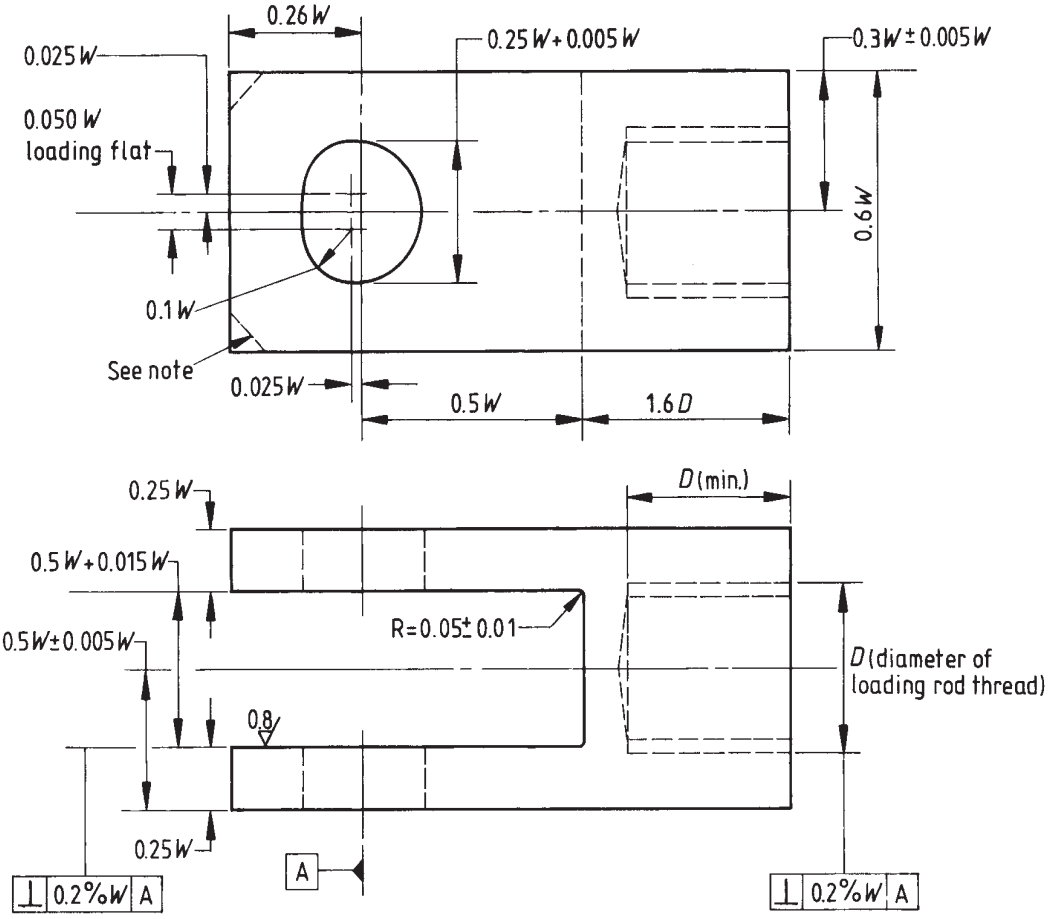

Surface finish is in micrometres

NOTE Corners of the clevis may be removed if necessary to accommodate the clip gauge.

Figure 12 — Typical design of clevis for applying a tensile force to a compact specimen using a hole with a flat in the clevis, and a pin having a diameter of $(0.24^{+0.000}_{-0.005})\ W$ (see Figure 11)

9 Test procedure

9.1 Specimen measurement

9.1.1 The dimensions of the specimen shall conform to the requirements of Clause **6**. Measurements shall be made both before testing, in accordance with **9.1.2**, **9.1.3**, **9.1.4** and **9.1.5**, and after testing, in accordance with **9.7**. The measurements shall be recorded and used for the calculation of K_{Ic} or critical CTOD and/or critical J values according to Clause **10**.

9.1.2 Measure the specimen thickness to ±0.025 mm or ±0.1 %, whichever is larger, at not less than three equally spaced positions along the anticipated crack extension path. The average of these measurements shall be taken as the thickness B.

9.1.3 Measure the specimen width to the nearest ±0.025 mm or ±0.1 %, whichever is larger, at not less than three equally spaced positions across the specimen thickness on a line not further than 10 % of the nominal width away from the crack plane. The average of these measurements shall be taken as the width W.

9.1.4 When outward pointing attached knife edges [see Figure 8b)] are used, the knife edge thickness z shall be measured. If razor blades are used for the knife edges, the half thickness of these shall be taken as the dimension z.

NOTE 1 If z is less than $0.002a$, it may be ignored.

NOTE 2 When integral or inward pointing attached knife edges are used (see Figure 8a) and Figure 9), the dimension z is equal to zero.

9.1.5 When a straight notch compact specimen is used, measure the dimension $(C-W)$ to within ±0.025 mm or ±0.1 %.

9.2 Three point bend testing

Set up the test fixture (see Figure 10) so the line of action of the applied force passes midway between the centres of the rollers within ±1 % of the distance between these centres. Adjust the span S to $4W \pm 0.02W$, and record the actual span to ±0.5 %. Locate the bend specimen with the crack tip midway between the rollers to ±1% S, and square to the roller axes to ±2 %.

Determination of K_{Ic} for materials and conditions for which it is appropriate to determine fracture toughness in terms of K_{Ic} alone shall be performed in accordance with BS EN ISO 12737.

For tests to measure K_{Ic} or critical CTOD, seat the notch opening gauge on the knife edges after squeezing the gauge beams together to maintain spring contract between the knife edges and beam seats.

NOTE The notch opens during the test.

For tests to measure J values, arrange either direct or indirect measurement of load-line displacement q as described in Annex B.

9.3 Compact tension testing

For tests to measure K_{Ic} or CTOD values using a straight notch compact specimen (see **6.2.1** and Figure 4), seat the notch opening gauge on the knife edges on the edge of the specimen (see Figure 8 and Figure 9), as described in **9.2**.

For tests to measure K_{Ic}, CTOD or J values using a stepped notch compact specimen (see **6.2.1** and Figure 5), seat the notch opening gauge on the attached knife edges on the load-line of the specimen (Figure 9), as described in **9.2**.

9.4 Specimen test temperature

The temperature shall be controlled and recorded, immediately prior to loading the specimen, to an accuracy of ±2 °C. Place the thermocouple or platinum resistance thermometer in contact with the surface of the specimen in a region not further than 2 mm from the crack tip or on the surface within the machined notch near the centre of the specimen. Tests shall be made in situ in suitable low or high temperature media. Before testing in a liquid medium, the specimen shall be retained in the liquid for at least 30 seconds per millimetre of thickness B after the specimen surface has reached the test temperature. When using a gaseous medium, a soaking time of at least one minute per millimetre of thickness shall be used.

If the specimen is transferred from one medium to another, and both are at the test temperature after the required soaking time has elapsed, then the specimen shall be soaked in the new medium for the time taken for transfer, after the test temperature is again reached. The temperature change during the transfer should not exceed 2 °C.

9.5 Testing rate

Using displacement control, apply a machine displacement such that a constant $\dot{K}$ is achieved at rates greater than 3.0 $\mathrm{MPa \cdot m^{0.5} s^{-1}}$, during linear elastic specimen deformation (see **8.2**). If necessary, verify $\dot{K}$ by preliminary tests. Record the value of $\dot{K}$ achieved (see Clause **12**).

9.6 Recording

Make a record of the output of the force sensing device versus time in order to calculate the rate of change of stress intensity factor with time $\dot{K}$. Make a simultaneous record of notch mouth opening gauge or direct load line displacement versus time in order to calculate the rate of change of the plastic component of CTOD or J with respect to time ($\dot{\delta}_{\mathrm{p}}$ or $\dot{J}_{\mathrm{p}}$). Record sufficient data to enable the output of the force sensing device at zero force to be identified and to permit analysis of the records as defined in **10.2**, **10.3** and **10.4**.

From this, make a record of the output of the force sensing device (see **8.3**) versus the output from the notch opening displacement gauge (see **8.5**). When an autographic record is made for a subsequent manual analysis of plane strain fracture toughness (see **10.2**), the initial slope of the force versus notch opening displacement record ought to be between 0.85 and 1.5.

Continue the test at least until the specimen can sustain no further increase in applied force (see Figure 13).

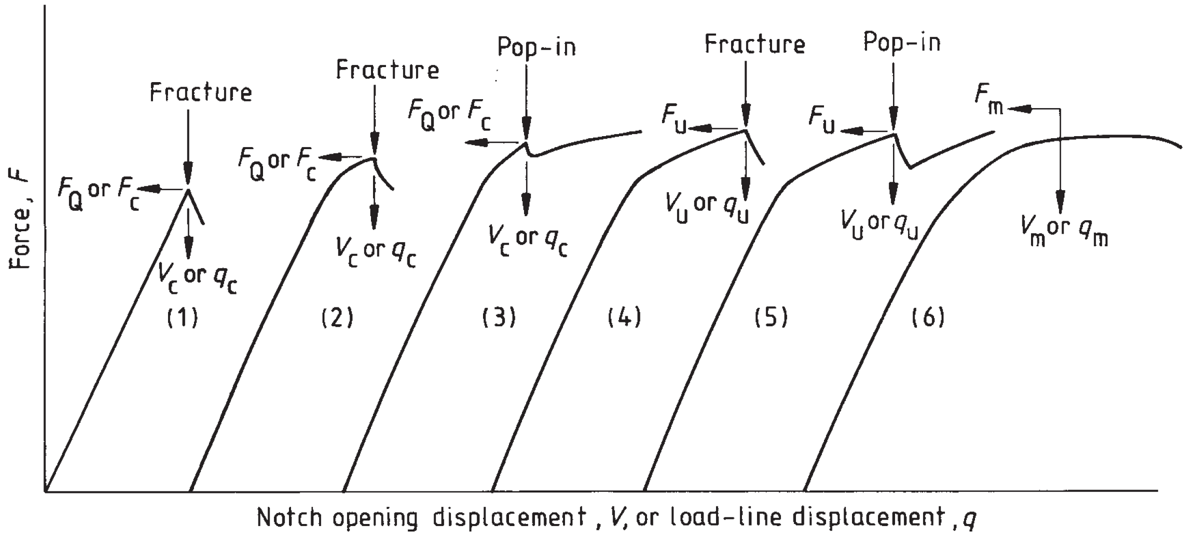

NOTE 1 F_c is the maximum force used in the determination of a provisional K_{Ic} value (see Figure 15 and **10.2**).

NOTE 2 F_c, F_u, and F_m, correspond to either δ_c, δ_u and δ_m, respectively, or J_c, J_u, and J_m, respectively.

NOTE 3 Pop-in behaviour is a function of the testing machine/specimen compliance and the recorded response rate.

Figure 13 — Characteristic types of force versus displacement records in fracture tests

9.7 Crack measurements after testing to fracture

9.7.1 *General*

After the test has been completed, the fracture surface of the specimen shall be examined and measured to determine the average original crack length a_0 and the amounts of any stable crack extension, Δa, i.e. according to **9.7.2** and **9.7.3** respectively.

NOTE When the test is terminated before the specimen has fractured in half it is necessary to break the specimen open to expose the fatigue precrack and any crack extension that has occurred during the test. The latter can be marked by heat-tinting, or applying a few fatigue cycles before breaking the specimen open. This should be done with care to minimize any additional deformation of the specimen. Cooling ferritic steels enough to ensure brittle behaviour on breaking open the specimen can be helpful.

9.7.2 *Original crack length*

Measure the crack length a to the tip of the fatigue precrack to ±0.25 % a or ±0.05 mm, whichever is the greater. The measurements shall be made at nine equally spaced points, where the outer points are located at 1 % B from the specimen surface. The original crack length, a_0 shall be obtained by firstly averaging the two measurements at the outer points and then averaging this value with the seven inner points. This involves the weighted summation of the crack length dimensions being divided by eight.

For the test to be valid the average original crack length a_0 shall meet the following requirements:

a) the ratio a_0/W shall be within the range 0.45 to 0.55;

b) for homogenous (parent) materials, the difference between any two of the nine crack length measurements shall not exceed 10 % a_0, for welding specimens with the crack in the heat affected zone or weld metal the difference between any two of the nine crack length measurements shall not exceed 20 % a_0;

c) no part of the fatigue precrack front shall be closer to the crack starter notch than 1.3 mm or 2.5 % W, whichever is the longer;

d) the fatigue precrack shall be within the appropriate envelope for the corresponding a_o/W value (see Figure 6);

e) the plane of the fatigue precrack shall be within 10° of the central plane of the crack starter notch.

The average original crack length, a_o shall be recorded for the determination of K_{Ic}, CTOD, or J values, according to Clause **10**

NOTE Where there is no evidence of stable crack extension (see **9.7.3**) five equally spaced measurements of fatigue crack length may be substituted for the nine equally spaced measurements referred to above, with the agreement of the parties concerned.

9.7.3 *Stable crack extension*

If the specimen fails by brittle crack extension (see **3.10**) prior to the first attainment of a maximum force plateau (see Figure 13, record types 2 and 4), the fracture surface shall be examined for evidence of stable crack extension (see **3.11**), i.e. in the region between the fatigue precrack front and the start of brittle crack extension.

NOTE 1 Evidence of stable crack extension generally appears as a fibrous thumbnail ahead of the fatigue precrack tip.

When there is evidence of stable crack extension, this shall be measured to ±0.05 mm. The measurements shall be made at nine equally spaced points where the outer points are located at 1 % B from the specimen surfaces. The stable crack extension (Δa) shall be obtained by firstly averaging the two measurements at the outer points and then averaging this value with the seven inner points. This involves the weighted summation of the crack extension dimensions being divided by eight.

When there is evidence of arrested brittle crack extension and subsequent stable crack extension, and this can be associated with pop-in behaviour or subsequent fracture prior to the first attainment of a maximum force plateau (see Figure 13), the total amounts of Δa prior to each pop-in and fracture shall be measured and recorded.

NOTE 2 The total amounts of Δa include any stable crack extension ahead of the fatigue precrack, and any stable crack extension associated with any pop-in before the particular pop-in or fracture behaviour being recorded.

The shape of the fatigue precrack, and any evidence of stable crack extension or arrested brittle crack extension prior to the first attainment of a maximum force plateau, shall be recorded on a diagram of the fracture surface. The diagram shall also record any unusual features of the fracture surface, such as splits or delaminations in planes that are perpendicular to the fracture surface.

NOTE 3 Splits and delaminations can result in pop-ins with no arrested brittle crack extension in the plane of the fatigue precrack.

10 Analysis of test data

10.1 General

Determine plane strain fracture toughness K_{Ic}, CTOD, or J values from a knowledge of the dimensions of the test specimen (B, W and C–W determined in accordance with **9.1**, a_o determined in accordance with **9.7** and where appropriate, z determined in accordance with **9.1.4**), the 0.2 % proof strength σ_{YSD} at the temperature and rate of strain of the fracture test (see Annex E), and specific data from the force versus displacement record of the fracture test (see **10.2**, **10.3** and **10.4**).

When the fracture occurs under elastic-plastic conditions, and it is not possible to determine valid K_{Ic} values (see **10.2.4**), determine either CTOD or J values, as described in **10.3** and **10.4** respectively.

Obtain data for the determination of K_{Ic}, CTOD and J values from a force F versus notch opening displacement V record.

NOTE 1 For a stepped notch compact specimen (see Figure 5), the notch opening displacement V is equal to the load-line displacement q. Therefore the same force versus displacement record can be used to determine values of both CTOD and J.

NOTE 2 In the abbreviated method described in Annex A, CTOD and J values are determined using a load point displacement versus time record.

NOTE 3 The force versus displacement record of the test usually has the appearance of one of the six types shown in Figure 13. Records of types 1, 2 and 3, involving crack extension within or close to the linear force versus displacement behaviours, are most likely to result in valid plane strain fracture toughness, K_{Ic} values (see **10.2**). The highest values of elastic plastic fracture toughness (CTOD or J) is associated with record types 4, 5 and 6.

NOTE 4 A record of the first attainment of a maximum force plateau may show a more abrupt drop in force than is shown by the type 6 record in Figure 13, especially in tests on high strength materials.

Pop-ins (see Figure 14) giving both force drops (y) and displacement increases (x) of less than 1 % shall be ignored. All other pop-ins shall be considered significant, and shall be assessed according to either of the following:

a) the procedures given in **10.2.2** for valid K_{Ic} determinations; or

b) Equation 1 for force drop at constant displacement, and the procedures in **10.3** and **10.4** for critical CTOD and critical J determinations, respectively.

$$d_{\mathrm{n}}\%F_1, \; = \; 100\left[1-\frac{D_1}{F_1}\left(\frac{F_{\mathrm{n}}-y_{\mathrm{n}}}{D_{\mathrm{n}}+x_{\mathrm{n}}}\right)\right] \tag{1}$$

where the symbols are as defined in Figure 14, and the subscript “n” indicates the particular pop-in to be assessed.

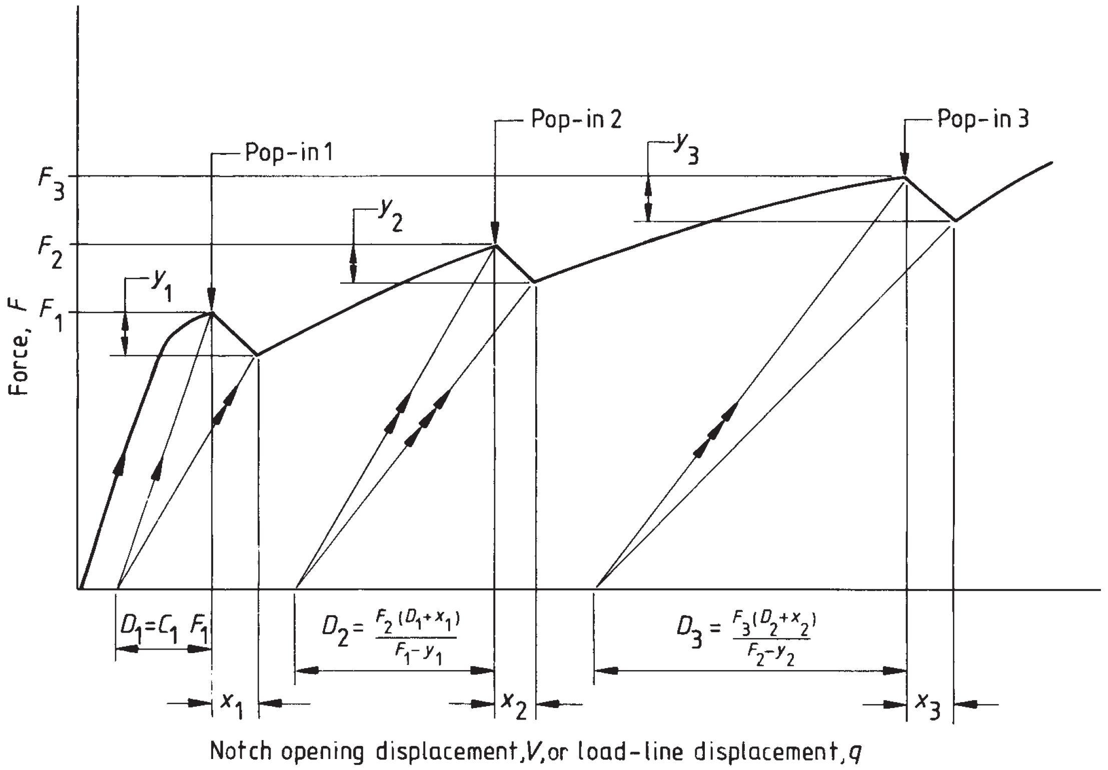

NOTE 1 C_1 is the initial compliance.

NOTE 2 D represents V or q.

Figure 14 — Assessment of pop-in behaviour

10.2 Determination of plane strain fracture toughness, K_{Ic}

10.2.1 *General*

Interpret the test record according to **10.2.2**, calculate a provisional result, K_{Q}, according to **10.2.3**, and then determine whether this K_{Q} value meets the specimen size requirements according to **10.2.5**.

Make additional validity checks according to the requirements of **10.2.2** and Clause **11**.

10.2.2 *Interpretation of test record*

Plot a curve of force versus notch opening displacement (see Figure 15), then draw a line from the point of failure F_c to the point on the record at 50 % of F_c. Draw lines parallel to this line and at a distance of 5 % of F_c on either side of it.

All parts of this curve from F_c to $F_c/2$ shall fall within this 10 % envelope. If it fails this requirement then the determination shall be deemed to be invalid.

If all parts of the curve conform to this requirement, calculate K_Q from F_c using the equations given in **10.2.3**.

10.2.3 *Calculation of K_Q*

10.2.3.1 *General*

Calculate K_Q from F_c using the relationship in **10.2.3.2** and **10.2.3.3**, and the values of B and W as determined in **9.1** and a_o determined according to **9.7**.

10.2.3.2 *For the bend specimens*

Calculate K_Q using Equation 2.

$$K_Q = \frac{F_c}{BW^{1.5}} \times f\left(\frac{a_o}{W}\right) \tag{2}$$

where

$$f\left(\frac{a_o}{W}\right) = \frac{3\left(\frac{a_o}{W}\right)^{0.5}\left[1.99 - \left(\frac{a_o}{W}\right)\left(1 - \frac{a_o}{W}\right)\left(2.15 - \frac{3.93a_o}{W} + \frac{2.7a_o^2}{W^2}\right)\right]}{2\left(1 + \frac{2a_o}{W}\right)\left(1 - \frac{a_o}{W}\right)^{1.5}} \tag{3}$$

NOTE To facilitate the calculation of K_Q, values of $f(a_o/W)$ are given in Table 2 for specific values of a_o/W.

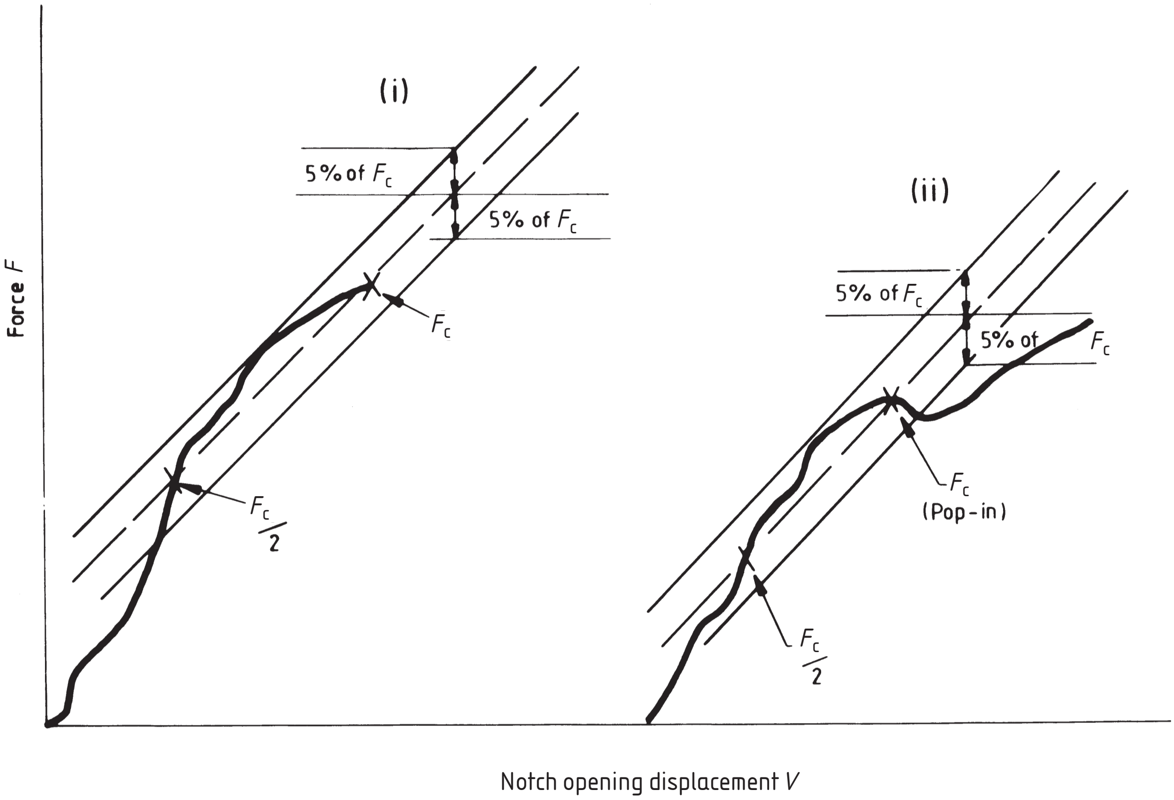

Figure 15 — Principal types of force versus crack mouth opening gauge displacement records showing the limits of allowable force and displacement variation for K_{Ic} determination

10.2.3.3 *For the compact specimens*

Calculate K_Q using Equation 4.

$$K_Q = \frac{F_c}{BW^{0.5}} \times f'\left(\frac{a_o}{W}\right) \tag{4}$$

where

$$f'\left(\frac{a_o}{W}\right) = \frac{\left(2 + \frac{a_o}{W}\right)\left(0.886 + 4.64\frac{a_o}{W} - 13.32\frac{a_o^2}{W^2} + 14.72\frac{a_o^3}{W^3} - 5.6\frac{a_o^4}{W^4}\right)}{\left(1 - \frac{a_o}{W}\right)^{1.5}} \tag{5}$$

NOTE To facilitate the calculation of K_Q, values of $f'(a_o/W)$ are given in Table 3 for specific values of (a_o/W).

10.2.4 ***Stress intensity factor rate calculations and limitations***

Calculate the rate of change of force $\dot{F}$ from the mean slope of the portion of the force/time interval curve where the force exceeds 50 % of the applied force F_c as shown in Figure 16.

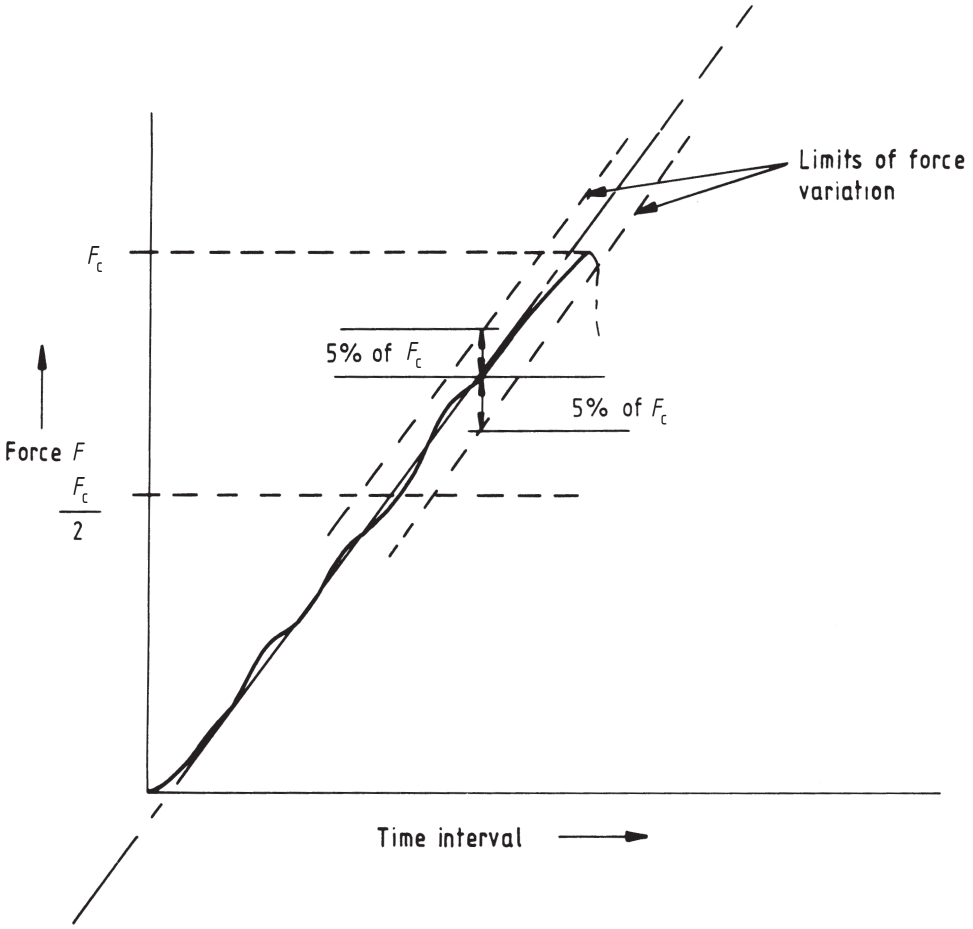

Figure 16 — Force variation limits for fracture toughness determination

Calculate $\dot{K}_1$ for a bend specimen using Equation 6 or for a test on a compact specimen using Equation 7.

$$\dot{K}_1 = \left(\frac{\dot{F}S}{BW^{1.5}}\right) \times f\left(\frac{a_0}{W}\right) \tag{6}$$

$$\dot{K}_1 = \left(\frac{\dot{F}}{BW^{0.5}}\right) \times f'\left(\frac{a_0}{W}\right) \tag{7}$$

The following restrictions shall apply.

a) The force F shall not deviate by more than 5 % of the applied force F_c from the mean linear increase of force with time over the portion of the force versus time interval record where the force exceeds 50 % of the applied force F_c (see Figure 16).

b) Deviation of the displacement record is restricted: it shall not deviate by more than 5 % of its value at F_c from the mean linear increase of V with time interval. This restriction only applies over that part of the test from where the time interval exceeds 50 % of that required to reach the force at F_c to the time interval at F_c (see Figure 17).

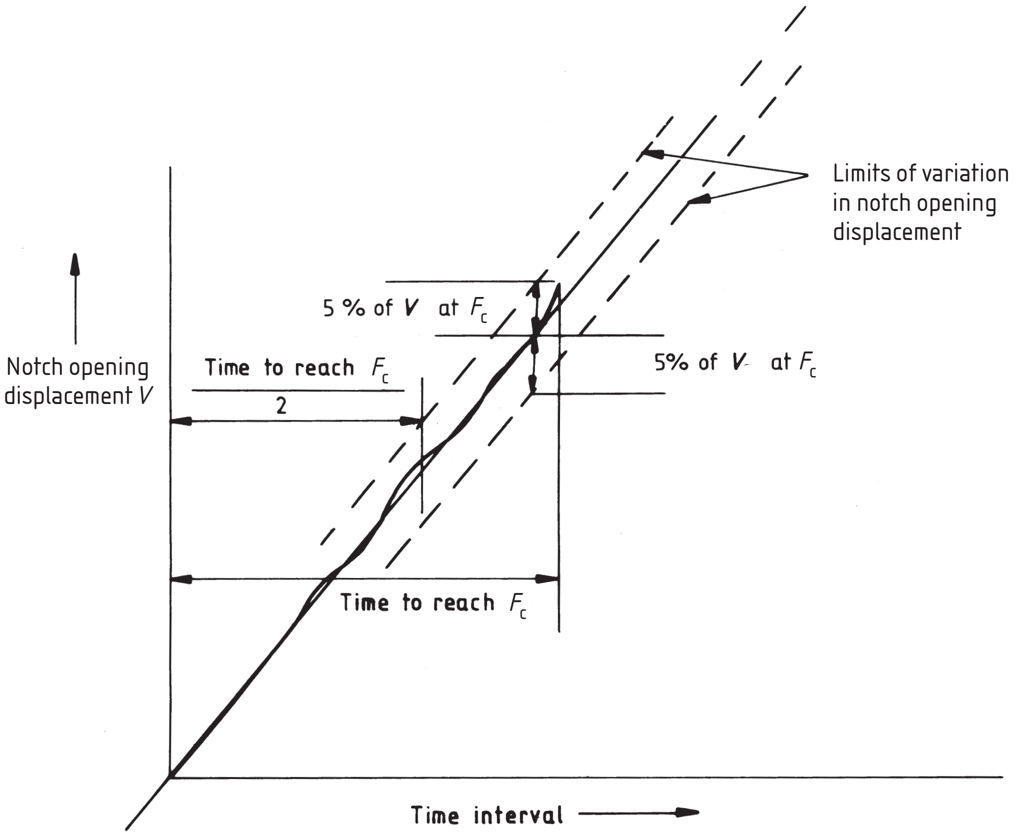

Figure 17 — Limits of crack mouth opening gauge displacement variations for plane strain fracture toughness determination

10.2.5 *Calculation of* K_{Ic}

Calculate the factor $2.5(K_Q/\sigma_{YSD})^2$. If this is greater than any one or more of the crack length a_o, thickness, B or ligament ($W - a_o$), or if any of the other validity criteria are not satisfied, the K_{Ic} test shall be invalid. A K_Q value can be reported if the size requirements for K_{Ic} are not met but the other validity requirements are met.

These checks shall be made using the quasistatic value of 0.2 % proof strength, σ_{YS} of the material under test at the test temperature.

If the result is invalid, recheck the specimen size requirements (see Clause **6**) using the dynamic yield strength, σ_{YSD}, determined in accordance with the requirements of Annex E for other agreed methods.

10.3 Determination of critical CTOD

10.3.1 *Interpretation of the force (F) versus notch opening displacement (V) record*

NOTE 1 The record is normally one of the six types shown in Figure 13.

NOTE 2 A smooth continuous record in which the applied force rises with increasing crack mouth opening gauge displacement up to the onset of unstable fracture, or to the initiation of an arrested crack, is shown in Figure 13, (2) and (3).

NOTE 3 In cases where ductile tearing precedes fracture, pop-in, or a maximum load instability, the force versus crack mouth opening gauge or load-line gauge displacement curves are typified by the types shown in Figure 13, (4), (5) and (6), respectively. These illustrate the values of the applied force (F_c, F_u, or F_m) that can be used in the calculation of δ_c, δ_u, δ_m.

NOTE 4 The critical displacement is the plastic component V_p at applied force F_c, F_u, or F_m as shown in Figure 18.

The crack mouth opening gauge displacement shall not deviate by more than 5 % of the value at 95 % of the critical force, from a mean fitted curve over that portion of the test where the force exceeds 50 % of the force at the critical value to that at 95 % of the critical value (see Figure 19).

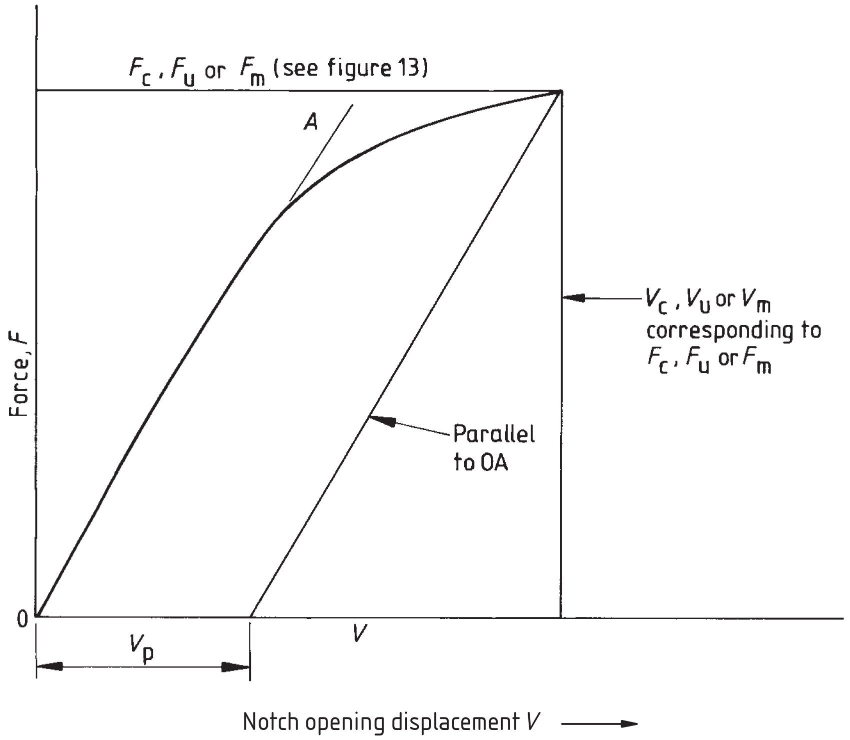

Figure 18 — Definition of V_p (for determination of CTOD)

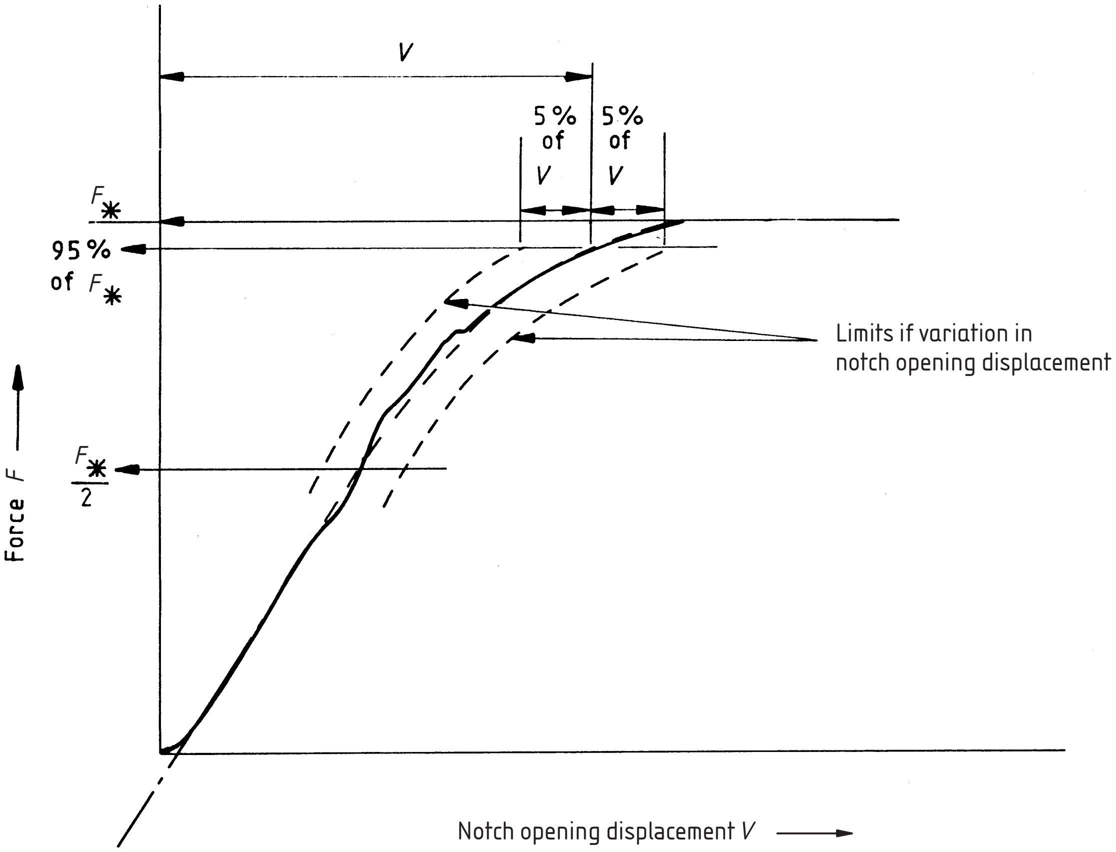

Figure 19 — Limits of force and displacement for CTOD and *J* determination

10.3.2 *Calculation of critical CTOD*

10.3.2.1 *General*

Using the dimensions B, W, $(C - W)$ and z, (as determined in **9.1**) the dimension a_o (as determined in **9.7**), the forces F_c, F_u or F_m (as determined in **10.3.1**), and the corresponding value of V_p, calculate δ_u using F_c, δ_u using F_u, or δ_m using F_m, from Equations 8 to 13.

10.3.2.2 *Bend specimens*

For bend specimens (see Figure 2 and Figure 3) use Equation 8:

$$\delta = \left[\frac{FS}{BW^{1.5}} \times f\left(\frac{a_o}{W}\right)\right]^2 \frac{(1-v^2)}{2\sigma_{YSD}E} + \frac{0.4(W-a_o)V_p}{0.4W+0.6a_o+z} \tag{8}$$

where

S is the bending span (see **9.2**)

$f(a_o/W)$ is given by Equation 3 in **10.3.2**, or by the values in Table 2 corresponding to specific values of a_o/W.

Where there is evidence of stable crack extension, Δa exceeding 0.2 mm calculate δ_{corr} using Equation 9.

$$\delta_{corr} = \left[\frac{FS}{BW^{1.5}} \times f\left(\frac{a_o}{W}\right)\right]^2 \frac{(1-v^2)}{2\sigma_{YSD}E} + \frac{0.6\Delta a + 0.4(W-a_o)V_p}{0.6(a_o+\Delta a)+0.4W+z} \tag{9}$$

10.3.2.3 *Straight notch compact specimen*

For a straight notch compact specimen (see Figure 4) use Equation 10.

$$\delta = \left[\frac{F}{BW^{0.5}} \times f'\left(\frac{a_o}{W}\right)\right]^2 \frac{(1-\upsilon^2)}{2\sigma_{\mathrm{YSD}}E} + \frac{0.46(W-a_o)V_p}{0.46W + 0.54a_o + (C-W) + z} \tag{10}$$

where

$f'(a_o/W)$ is given by Equation 5 in **10.2.3.3**, or by the values in Table 3 corresponding to specific values of a_o/W.

Where there is evidence of stable crack extension, Δa exceeding 0.2 mm calculate δ_{corr} using Equation 11.

$$\delta_{\mathrm{corr}} = \left[\frac{F}{BW^{0.5}} \times f(a_o/W)\right]^2 \frac{(1-\upsilon^2)}{2\sigma_{\mathrm{YSD}}E} + \frac{0.54\Delta a + 0.46(W-a_o)V_p}{0.54(a_o+\Delta a) + 0.46W + (C-W) + z} \tag{11}$$

10.3.2.4 *Stepped notch compact specimen*

For the stepped notch compact specimen (see Figure 5) use Equation 12.

$$\delta = \left[\frac{F}{BW^{0.5}} \times f'\left(\frac{a_o}{W}\right)\right]^2 \frac{(1-\upsilon^2)}{2\sigma_{\mathrm{YSD}}E} + \frac{0.46(W-a_o)V_p}{0.46W + 0.54\ a_o + z} \tag{12}$$

where

$f'(a_o/W)$ is given in **10.3.2.3**.

Where there is evidence of stable crack extension, Δa exceeding 0.2 mm calculate δ_{corr}, using Equation 13.

$$\delta_{\mathrm{corr}} = \left[\frac{F}{BW^{0.5}} \times f(a_o/W)\right]^2 \frac{(1-\upsilon^2)}{2\sigma_{\mathrm{YSD}}E} + \frac{0.54\Delta a + 0.46(W-a_o)V_p}{0.54(a_o+\Delta a) + 0.46W + z} \tag{13}$$

10.3.3 *Crack tip opening displacement rate calculations and limitations*

10.3.3.1 *General*

The following restrictions shall apply to the force versus time interval curve (Figure 20) and the crack mouth opening gauge displacement versus time interval curve (Figure 21).

a) Draw a smooth equidistant envelope without inflexion and of width equal to 10 % of the force F_c, F_u or F_m around the force versus time interval curve (Figure 20) from F_c, F_u or F_m to the force F_A, calculated from Equation 14 for bend specimens and Equation 15 for compact specimens:

$$F_A = \frac{B\sigma_{\mathrm{YSD}}(W-a_o)^2}{S} \tag{14}$$

$$F_A = \frac{0.75B\sigma_{\mathrm{YSD}}(W-a_o)^2}{(2W+a_o)} \tag{15}$$

From the point at which the force equals F_A, draw a straight line joining F_A with the point at $F_A/2$. Then draw lines parallel to this line and 5 % of F_c, F_u or F_m on either side of it.

All parts of the force versus time interval curve shall be within the envelope described (see Figure 20).

b) Deviation of the crack mouth opening gauge displacement V is restricted: it shall not deviate by more than 5 % of its value at F_c, F_u or F_m from the mean increase of V with time interval.

NOTE This restriction only applies over that portion of the test where the time interval exceeds 50 % of that required to reach the force at F_c, F_u or F_m to the time interval at F_c, F_u or F_m (see Figure 21).

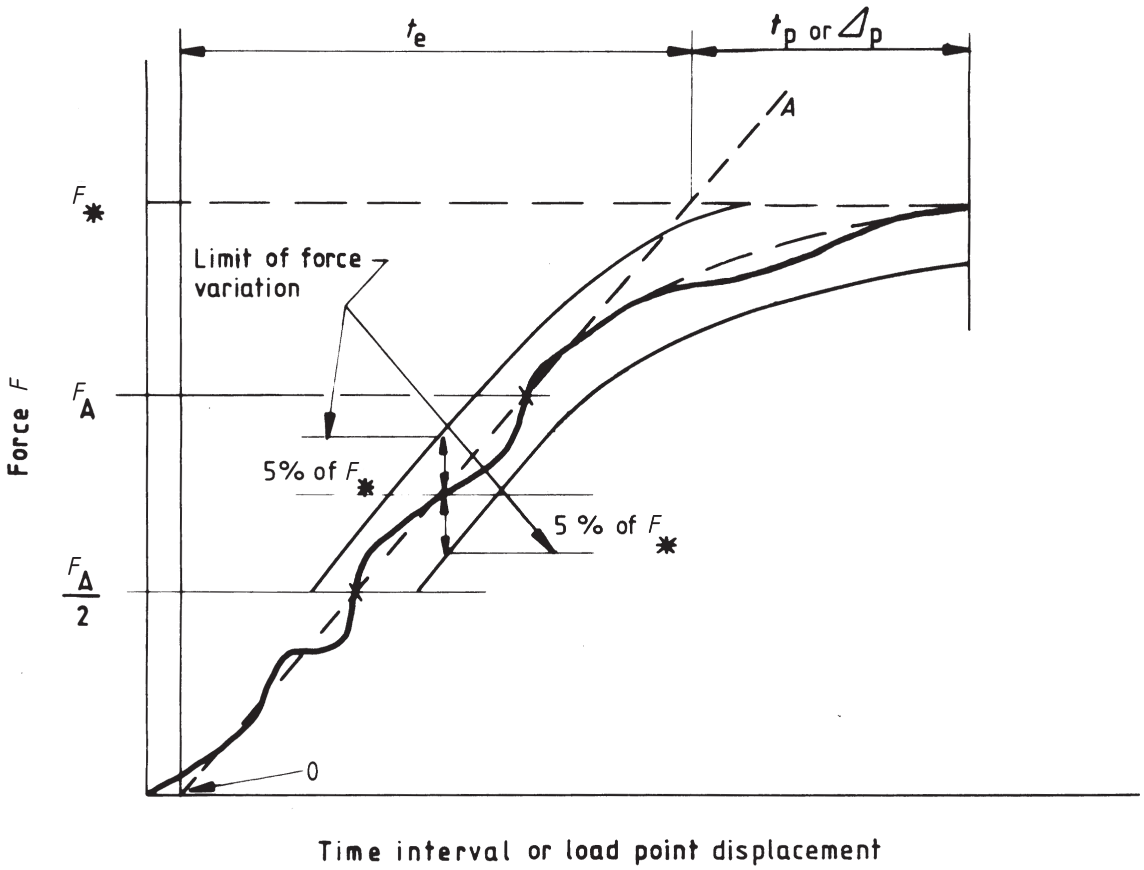

$$F_A = \frac{B\sigma_{YSD}(W-a_o)^2}{S}$$

where

B	is the specimen thickness in millimetres (mm)
W	is the effective width of test specimen in millimetres (mm)
a_o	is the average original crack length in millimetres (mm)
S	is the span between outer loading points in three point bend test, in millimetres (mm)
σ_{YSD}	is the 0.2 % proof stress measured at the temperature and loading rate of loading of the fracture test

Figure 20 — Force and load point displacement variation for fracture toughness determination

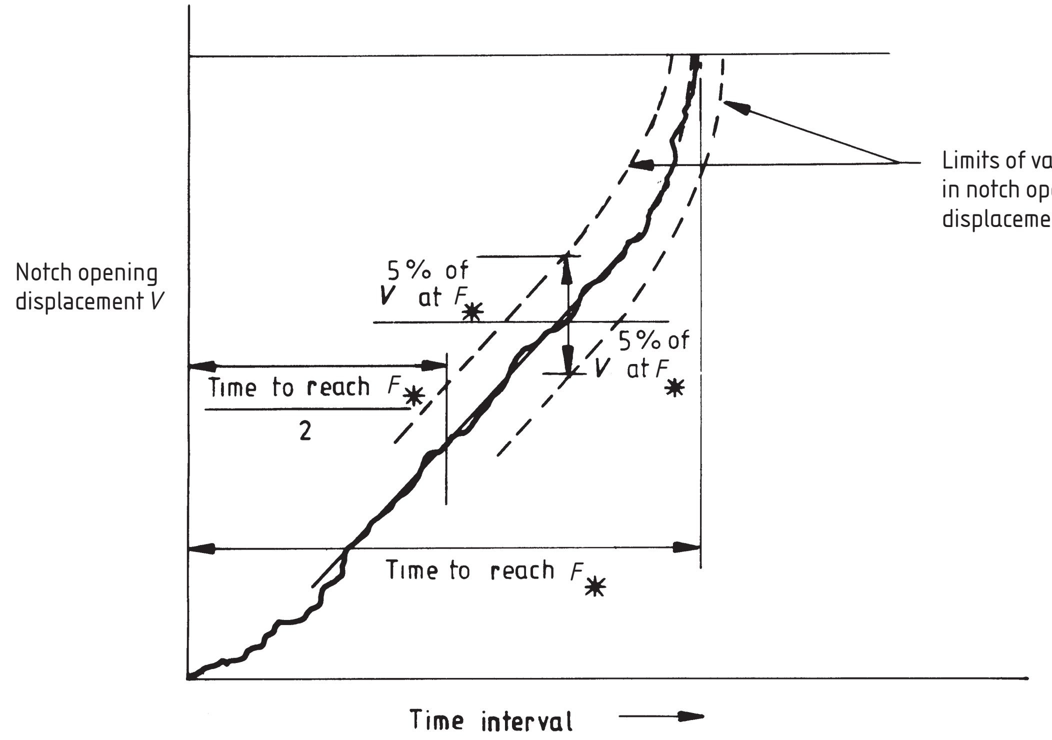

Figure 21 — Displacement variation limits for CTOD and *J* determination

Calculate the rate of change of applied force with time, $\dot{F}$ from the slope of the linear portion of the force versus time interval curve between F_A and $F_A/2$ as illustrated in Figure 20. Calculate the rate of change of stress intensity factor, $\dot{K}_1$, during the initial elastic loading of the specimen and the rate of change of the plastic component CTOD $\dot{\delta}_p$, from Equations 16, 17 and 18.

10.3.3.2 *Bend specimen*

For the bend specimen (see Figure 2 and Figure 3) use Equation 16 to calculate the plastic component CTOD and Equation 6 to calculate $\dot{K}$ in **10.2.3.2** or by the values in Table 2 corresponding to specific values of a_o/W.

$$\dot{\delta}_p = \frac{0.4(W - a_o)V_p}{(0.4W + 0.6a_o + z)t_p} \tag{16}$$

where t_p is the time interval for plastic deformation of the specimen (see Figure 20).

10.3.3.3 *Straight notch compact specimen*

For the straight notch compact specimen (see Figure 4), use Equation 17 to calculate the plastic component CTOD and Equation 7 to calculate $\dot{K}$ in **10.2.3.3** or by the values in Table 3 corresponding to specific values of a_o/W.

$$\dot{\delta}_p = \frac{0.46(W - a_o)V_p}{(0.46W + 0.54a_o + (C - W) + z)t_p} \tag{17}$$

where t_p is the time interval for plastic deformation of the specimen (see Figure 20).

10.3.3.4 *Stepped notch compact specimen*

For the stepped notch compact specimen (see Figure 5), use Equation 18 to calculate the plastic component CTOD and Equation 7 to calculate $\dot{K}_1$ in **10.2.3.3** or by the value in Table 3 corresponding to specific values of a_o/W.

$$\dot{\delta}_p = \frac{0.46(W - a_o)V_p}{(0.46W + 0.54a_o + z)t_p} \tag{18}$$

where t_p is the time interval for plastic deformation of the specimen (see Figure 20).

10.4 Determination of critical *J*

10.4.1 *Interpretation of the force, F versus displacement record*

10.4.1.1 *General*

NOTE 1 The record is normally one of the six types shown in Figure 13.

NOTE 2 A smooth continuous record, in which the applied force rises with increasing load-line displacement up to the onset of unstable fracture or to the initiation of an arrested crack, is shown in Figure 13 (2) and (3).

NOTE 3 In cases where ductile tearing precedes fracture, pop-in, or a maximum load instability, the force versus load-line displacement curves are typified by the types shown in Figure 13 (4), (5) and (6), respectively. These illustrate the values of the applied force (F_c, F_u, or F_m) that shall be used in the calculation of J_c, J_u, J_m.

The load-line displacement shall not deviate by more than 5 % of the value at 95 % of the critical force, from a mean fitted curve over that portion of the test where the force exceeds 50 % of the force at the critical value to that at 95 % of the critical values (see Figure 19).

10.4.1.2 *Determination of* U_p

Determine and record the plastic component of the work done U_p, by measuring the area indicated in Figure 22, *k* and corresponding to the appropriate load-line displacement q_c, q_u or q_m.

The area corresponding to U_p in Figure 22 can be determined either directly from the test record (e.g. by using a polar planimeter), or by numerical integration by computer techniques, or by a combination of the latter and an analytical method based on elastic compliance, which involves the subtraction of the theoretical elastic area U_e from the total area *U*.

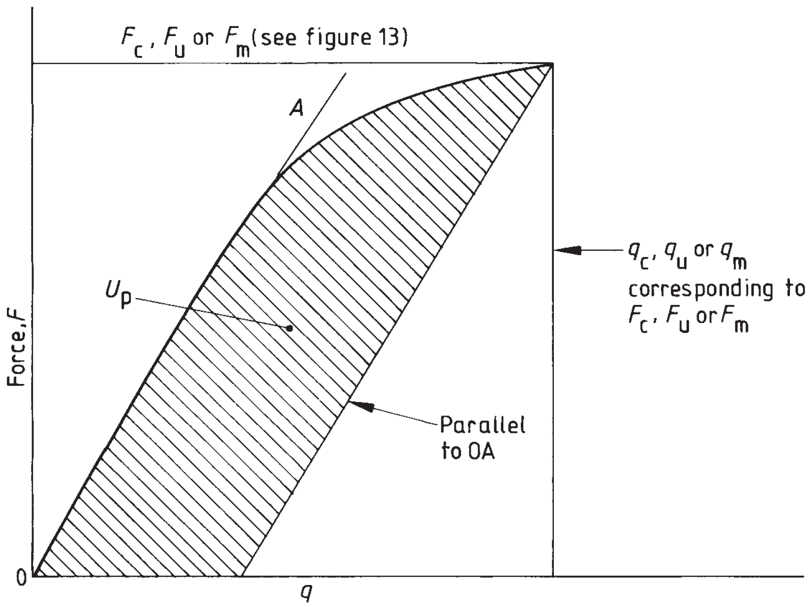

Figure 22 — Definition of U_p (for determination of *J*)

10.4.2 *Calculation of J*

10.4.2.1 *General*

Using the dimensions B and W (as determined in **9.1**) the dimension a_o (as determined in **9.7**), the forces F_c, F_u or F_m and the corresponding value of U_p (as determined in **10.4.1.2**), calculate either J_c using F_c, J_u using F_u, or J_m using F_m, from Equations 19 to 22.

10.4.2.2 *Bend Specimens*

For bend specimens (see Figure 2 and Figure 3) calculate J using Equation 19.

$$J = \left[\frac{FS}{BW^{1.5}} \times f\left(\frac{a_o}{W}\right)\right]^2 \frac{(1-\upsilon^2)}{E} + \frac{2U_p}{B(W-a_o)} \qquad (19)$$

where S is the bending span (see **9.2**) and $f(a_o/W)$ is given by Equation 3 in **10.3.2.3**, or by the values in Table 2 corresponding to specific values of a_o/W.

Where there is evidence of stable crack extension Δa exceeding 0.2 mm calculate J_{corr} using Equation 20.

$$J_{corr} = J\left[1 - \frac{(0.75\eta_p - 1)}{W-a_o}\Delta a\right] \qquad (20)$$

where

$\eta_p = 2$ for single edge notched bends

10.4.2.3 *Stepped notch compact specimens*

For stepped notch compact specimens (see Figure 5) calculate J using Equation 21.

$$J = \left[\frac{F}{BW^{0.5}} \times f'\left(\frac{a_o}{W}\right)\right]^2 \frac{(1-\nu^2)}{E} + \frac{\eta_p U_p}{B(W-a_p)} \qquad (21)$$

where

$f'(a_o/W)$ is given by Equation 5 in **10.2.3.3**, or by the values in Table 3 corresponding to specific values of a_o/W, and

$$\eta_p = 2 + 0.522\left(1 - \frac{a_o}{W}\right)$$

Where there is evidence of stable crack extension Δa exceeding 0.2 mm calculate J_{corr} using Equation 22.

$$J_{corr} = J\left[1 - \frac{(0.75\eta_p - 1)}{W-a_o}\Delta a\right] \qquad (22)$$

where

$\eta_p = 2 + 0.522\left(1 - \frac{a_o}{W}\right)$ for stepped notch compact tension specimens.

10.4.3 *J integral rate calculations and limitations*

10.4.3.1 *General*

The following restrictions shall apply to the force versus time interval curve (Figure 20) and the load-line displacement versus time interval curve (Figure 21).

a) Draw a smooth equidistant envelope without inflexion and of width equal to 10 % of the force F_c, F_u or F_m around the force versus time interval curve (Figure 18) from F_c, F_u or F_m to the force F_A, calculated from Equation 23 for bend specimens and Equation 24 for compact specimens;

$$F_A = \frac{B\sigma_{YSD}(W - a_o)^2}{S} \tag{23}$$

$$F_A = \frac{0.75B\sigma_{YSD}(W - a_o)^2}{(2W + a)} \tag{24}$$

From the point at which the force equals F_A, draw a straight line joining F_A with the point at $F_A/2$. Then draw lines parallel to this line and 5 % of F_c, F_u or F_m on either side of it.

All parts of the force versus time interval curve shall be within the envelope described (see Figure 20).

b) Deviation of the load-line displacement q is restricted: it shall not deviate by more than 5 % of its value at F_c, F_u or F_m from the mean increase of q with time interval. This restriction only applies over that portion of the test where the time interval exceeds 50 % of that required to reach the force at F_c, F_u or F_m to the time interval at F_c, F_u or F_m (see Figure 21).

Calculate the rate of change of force, $\dot{F}$ from the slope of the linear portion of the force versus time interval curve between F_A and $F_A/2$ as illustrated in Figure 20.

Calculate the rate of change of stress intensity factor, $\dot{K}_1$ during the initial elastic loading of the specimen and the rate of change of the plastic component of the J integral, $\dot{J}_p$, from Equation 25 and Equation 26.

10.4.3.2 *Bend specimen*

For bend specimens (see Figure 2 and Figure 3), use Equation 25 to calculate the J integral by using Equation 6 to calculate $\dot{K}$.

$$\dot{J}_p = \frac{2U_p}{B(W - a_o)t_p} \tag{25}$$

where t_p is the time interval for plastic deformation of the test specimen (see Figure 20).

10.4.3.3 *Stepped notched specimen*

For the step notched specimen (see Figure 5), use Equation 26 to calculate the J integral by using Equation 7 to calculate $\dot{K}_1$.

$$\dot{J}_p = \frac{\eta_p U_p}{B(W - a_o)t_p} \tag{26}$$

where

$\eta_p = 2 + 0.522\left(1 - \frac{a_o}{W}\right)^*$, and

t_p is the time interval for plastic deformation of the test specimen (see Figure 20).

11 Check lists for qualification of data

NOTE Use of the checklists enables an invalid determination to be abandoned at the earliest possible stage.

11.1 Specimen dimensions

11.1.1 Before fatigue precracking, check that the specimen has the dimensions and tolerances specified in **6.1**.

11.1.2 Before carrying out the fracture test, check that all the requirements of **7.4.6** are satisfied.

11.1.3 After carrying out the fracture test, check that:

a) multi-plane fatigue precracking and fracture is not present at the fatigue precrack front;

b) the average crack length a_o to specimen width W ratio is between 0.45 and 0.55 (see **9.7.2**);

c) for homogenous (parent) materials, the difference between any of the nine crack length measurements shall not exceed 10 % of a_o, for weldment specimens with the crack in the heat affected zone or weld metal the difference between any two of the nine crack length measurements shall not exceed 20 % of a_o;

d) no part of the fatigue precrack front is closer to the crack starter notch than 1.3 mm or 2.5 %W, whichever is the larger;

e) the plane of the fatigue precrack is within 10° of the central plane of crack extension.

11.1.4 Before starting to analyse the data according to Clause **10**, check that:

a) when an autographic force versus displacement record is to be used for a manual K_{Ic} analysis, the initial slope of the record is between 0.85 and 1.5 (see **9.6**);

b) the force versus crack mouth opening gauge displacement linearity is correct (see **10.2.2**, **10.3.1** or **10.4.1**);

c) the force versus time interval linearity is correct [see **10.2.4**a), **10.3.3**a) or **10.4.3**b)];

d) the crack mouth opening gauge displacement versus time interval linearity is correct [see **10.2.4**b), **10.3.3**b) or **10.4.3**b)];

e) the fatigue stress intensity factor K_f has not exceeded the limits in **7.4.4** and **7.4.5**;

f) the fatigue ratio R is the range 0 to 0.1.

12 Test report

The test report shall include the following information:

a) the number of this British Standard (i.e. BS 7448-3:2005);

b) the identity of the test specimen;

c) the identity and form of the material tested (e.g. forging, plate, casting, etc.), and its condition (see **7.1**);

d) the geometry and main dimensions of the specimen tested (see Clause **6** and **9.1**);

e) whether the specimen was full thickness of sub-size (see **6.1.2**);

f) the crack plane identification (see **7.2**);

g) the fatigue precracking details, including the final F_f and R values (see **7.4**);

h) the tensile strength σ_{TSP} and 0.2 % proof strength σ_{YSP} of the specimen material at the temperature of fatigue precracking;

i) the span S used in the three-point bend test (see **9.2**), if applicable;

j) the knife edge thickness z (see **9.1.4**), if applicable;

k) the initial stress intensity factor rate $\dot{K}$ (see **9.6**);

l) the force F versus notch opening displacement V record (see **9.7**); and/or the force F versus load-line displacement q record, (see **9.7**);

m) the temperature T of the specimen at the time of the test (see **9.4**);

n) the 0.2 % proof strength σ_{YSD} of the specimen at the temperature and rate of strain of the test;

o) a diagram of the fracture surface showing the crack length, a_o, and the shape and size of the fatigue precrack, the extent of stable crack extension Δa and any evidence of arrested brittle crack extension associated with pop-in behaviour, or any other unusual features of the fracture surface (see **9.7**);

p) the value of the plane strain fracture toughness K_{Ic}, or the corresponding invalid quantity K_Q if applicable;

q) the value and type of CTOD (e.g. δ_c, δ_u or δ_m), if applicable;

r) the value of the rate of change of plastic crack opening displacement with time $\dot{\delta}_p$ if applicable;

s) the value and type of J (e.g. J_c, J_u or J_m), if applicable;

t) the value of the rate of change of the plastic component of the J-integral with time $\dot{J}_p$, if applicable;

u) details of any of the above items that fail to meet the validity requirements in the stated clauses, and thereby result in an invalid determination of fracture toughness according to this method.

Annex A (informative)
Abbreviated method for determination of dynamic fracture toughness of metallic materials

A.1 General

This method may be less accurate than the method described in the main body of this standard. It may be applied when the rate of change in stress intensity factor exceeds 3 000 $\text{MPa}\cdot\text{m}^{0.5}\text{s}^{-1}$ provided the validity criteria are met (see Clause **11**). It is applicable to bend and stepped notched compact specimens.

NOTE Equally suitable are the methods described in ASTM E-399 1990 (1997) Annex 7 and ASTM E-1820 2001 Annexes A.13 and A.14 provided that the test duration is not less than 1 ms.

A.2 Principle

The method does not require a notch opening displacement gauge. For the determination of plane strain fracture toughness K_{Ic}, critical CTOD and critical J a plot of force versus time interval is made during the test. For the determination of CTOD and J an additional record of load point displacement versus time interval is also made. In this method, load point displacement q is approximated by test machine ram displacement.

Force measurement is obtained through instrumenting the rectangular section bend specimen with resistance strain gauges as shown in Figure A.1, and averaging the two readings. It is therefore necessary to carry out a static force calibration for each specimen after pre-cracking and gauging to obtain the relationship between resistance strain gauge volts output and indicated force. Carry out the static calibration recording gauge volts output and indicated force at a minimum of five equally spaced indicated force intervals up to two-thirds of the final pre-cracking force.

A.3 Determination of the plane strain fracture toughness K_{Ic}

Use the maximum force recorded during the determination directly to calculate the plane strain fracture toughness K_{Ic}.

A force drop should not be assumed to be an arrested crack extension (pop-ins) unless it is confirmed by examination of the fracture.

When the arrested crack extension cannot be confirmed by this examination, the test is invalid. Draw a line on the force versus time interval curve between the points at which the maximum force is attained F_{c} and that at which the force is half this value $F_{\text{c}}/2$ (see Figure 16). Then draw lines parallel to this one and 5 % of F_{c} on either side of it. The force versus time interval curve above $F_{\text{c}}/2$ ought to be within the 10 % envelope so defined.

The value of F_{c} is then used to calculate the plane strain fracture toughness K_{Ic} according to **10.2.3**.

A.4 Determination of critical CTOD

Determine the plastic component of the critical CTOD value, δ_{p}, corresponding to the critical applied force F_{c}, F_{u} or F_{m}, using Equation 17 or 18. The rate of change in the plastic component of CTOD with time can be calculated using Equation A.1 for bend specimens and Equation A.2 for compact specimens:

$$\delta_{\text{p}} = \frac{1.6(W-a_{\text{o}})q_{\text{p}}}{S} \tag{A.1}$$

$$\delta_{\text{p}} = \frac{(W-a_{\text{o}})q_{\text{p}}}{(W+1.17a_{\text{o}})} \tag{A.2}$$

where

q_{p} is determined from the product of $\dot{q}$ and t_{p} (see Figure 20),

$\dot{q}$ is approximated by the test machine ram displacement rate.

The critical CTOD value corresponding to F_c, F_u or F_m, is calculated from Equation A.3 for a bend specimen or Equation A.4 for a compact specimen.

$$\delta = \left(\frac{FS}{BW^{1.5}} \times f\left(\frac{a'_o}{W}\right)\right)^2 \frac{(1+v^2)}{2\sigma_{YSD}E} + \delta_p \tag{A.3}$$

where $f(a_o/W)$ is given by Equation 3 in **10.2.3.2** or by the values in Table 2 corresponding to specific values of a_o/W.

$$\delta = \left(\frac{F}{BW^{0.5}} \times f'\left(\frac{a_o}{W}\right)\right)^2 \frac{(1+v^2)}{2\sigma_{YSD}E} + \delta_p \tag{A.4}$$

where $f'(a_o/W)$ is given by Equation 5 in **10.2.3.3** or by the values in Table 3 corresponding to specific values of a_o/W.

A force drop should not be assumed to be an arrested crack extension (pop-in) unless it is confirmed by examination of the fracture. When the crack extension cannot be confirmed by this examination, the test is invalid.

The following restrictions apply:

a) Draw a smooth envelope equidistant without inflexion and of width equal to 10 % of the force F_c, F_u or F_m, around the force versus time or force versus load point displacement curve (Figure 20) from F_c, F_u or F_m, to the point at which the force is given by Equation A.5 for a bend specimen or Equation A.6 for a compact specimen:

$$F_A = \frac{B\sigma_{YSD}(W-a_o)^2}{S} \tag{A.5}$$

$$F_A = \frac{0.75B\sigma_{YSD}(W-a_o)^2}{(2W+a_o)} \tag{A.6}$$

From the point at which the force equals F_A draw a straight line which joins F_A with the point at $F_A/2$. Then draw lines parallel to this line and 5 % of F_c, F_u and F_m, on either side of it.

All parts of the force versus time interval or force versus load point displacement curve should be within the envelope described (see Figure 20).

b) Deviation of the test piece load point displacement q is restricted. It should not deviate by more than 5 % of its value at F_c, F_u or F_m, from the mean linear increase of displacement with time interval. This restriction only applies over the portion of the test where the time interval exceeds 50 % of that required to reach F_c, F_u or F_m (see Figure A.2).

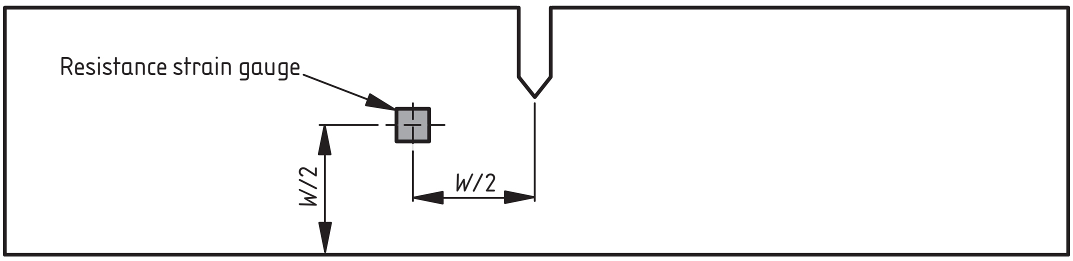

NOTE 1 Resistance strain gauges shall be attached to both sides of the specimen and each should be wired as a quarter bridge (requiring two non-attenuated transducer amplifiers).

NOTE 2 The load measurement is determined from the average of the two resistance strain gauge readings.

Figure A.1 — Resistance strain gauge positions for load measurements from rectangular section bend specimen

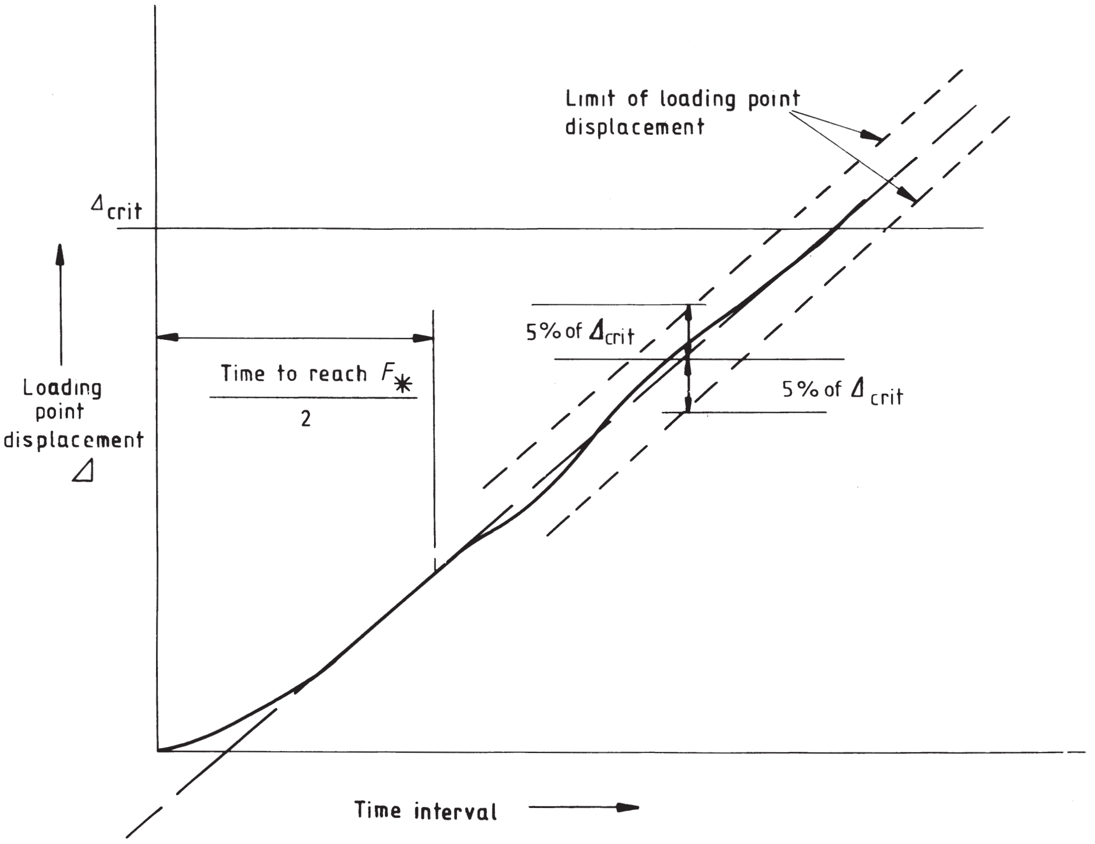

Δ_{crit} is the loading point displacement at F_*

Figure A.2 — Limits of loading point displacement variations for CTOD and *J* determination

A.5 Determination of the *J* integral

Determine the *J* integral by calculating the plastic component U_p of the area U under the force versus load point displacement curve at F_c, F_u or F_m (see Figure 22), using Equation A.7.

$$U_p = U - \frac{F_{q_c}}{2} \qquad \text{(A.7)}$$

where

q_c is determined from the product of $\dot{q}$ and t_c (see Figure 20); and

U can be determined from the product of the area under the force versus time curve U_t and $\dot{q}$;

where

$\dot{q}$ is approximated by the test machine ram displacement rate.

The *J* integral is given by Equation A.8 for a bend specimen or Equation A.9 for a compact specimen.

$$J = \left[\frac{FS}{BW^{1.5}} \times f\left(\frac{a_o}{W}\right)\right]^2 \frac{(1-v^2)}{E} + \frac{\eta_p U_p}{B(W-a_o)} \qquad \text{(A.8)}$$

where $f(a_o/W)$ is given by Equation 3 in **10.2.3.2** or by the values in Table 3 corresponding to specific values of a_o/W.

$$J = \left[\frac{F}{BW^{0.5}} \times f'\left(\frac{a_o}{W}\right)\right]^2 \frac{(1-\upsilon^2)}{E} + \frac{\eta_p U_p}{B(W-a_o)} \tag{A.9}$$

where $f'(a_p/W)$ is given by Equation 5 in **10.2.3.3**, or by the values in Table 3 corresponding to specific values of a_o/W, and

$$\eta_p = 2 + 0.522\left(1 - \frac{a_o}{W}\right).$$

Annex B (informative)
Measurement of load-line displacement, q in a three-point bend test

As described in **10.4**, the method of calculating critical J values requires the measurement of the area under a force F versus load-line displacement q record (see Figure 21). However, unlike the situation when testing a stepped notch compact specimen (see Figure 5 and **9.3**), it is difficult to obtain direct measurements of the load-line displacement for a three-point bend specimen (see Figure 2 and **9.2**). The difficulty is in separating the true load-line displacements of the specimen from the elastic plastic displacements in the specimen under the three loading points, and also the elastic displacements in the loading fixtures and testing machine. These extraneous displacements are additive, so that measurements of machine ram or crosshead displacement, or relative displacements between the specimen and testing machine overestimates the true load-line displacement. The extent of such an overestimate varies with the specimen material, condition and temperature, the loading rate, and also the dimensions of the specimen, loading fixtures and testing machine.

The only way to obtain load-line displacement directly is to measure the relative displacement of appropriate points on the specimen. This can be done for example, by measuring the vertical displacement of the notch tip relative to a horizontal line that is a fixed distance from the undeformed edge of the specimen near the outer loading points. This type of direct measurement can be obtained by using a horizontal comparator bar, and measuring the vertical displacement of the bar relative to the notch tip, or notch mouth as shown schematically in Figure B.1. However, this method is recommended only for those test conditions where the machine ram crosshead displacement is controllable such that in the final resting position after testing the loading points do not come into contact with the comparator.

An indirect measurement of load-line displacement can be obtained by measuring the extraneous displacements separately, and then subtracting them from the machine ram crosshead displacement. Thus, referring to the measurements in Figure B.2, it can be seen that the load-line displacement, q at any particular force, F is given by:

$$q = \Delta - \Delta_1 - \Delta_2$$

If preferred, the total extraneous displacement ($\Delta_1 + \Delta_2$) can be measured with the loading points close together, as shown in Figure B.3.

An alternative indirect measurement of load-line displacement can be obtained from two measurements of notch opening displacement. For example, using one notch opening displacement gauge located near the notch mouth, and a second located above the notch mouth (see Figure B.4), the load-line displacement may be determined from Equation B.1.

$$q = S\frac{(V_2 - V_1)}{4(z_2 - z_1)} \tag{B.1}$$

Equation B.1 assumes that the bend specimen deforms as two rigid halves about a centre of rotation, and that S is the actual span (this may vary during the test), under these conditions Equation B.1 would underestimate q by less than 1 % for $\theta < 8°$. For $\theta < 8°$, the load-line displacement may be estimated with similar accuracy from Equation B.2.

$$q = \frac{S}{2}\tan\left[\arcsin\frac{(V_2 - V_1)}{2(z_2 - z_1)}\right] \tag{B.2}$$

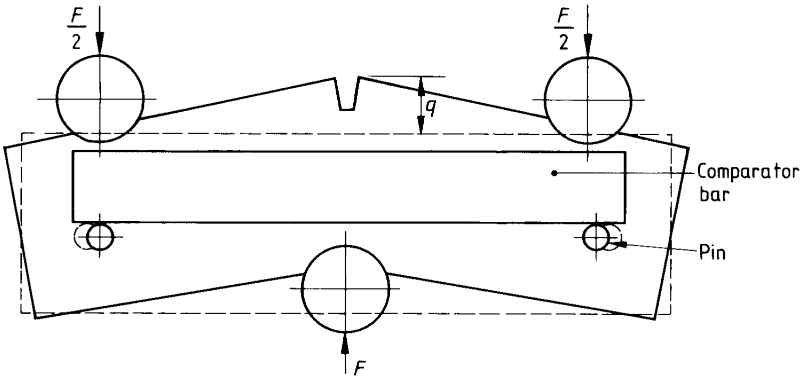

Figure B.1 — Schematic representation of the comparator bar

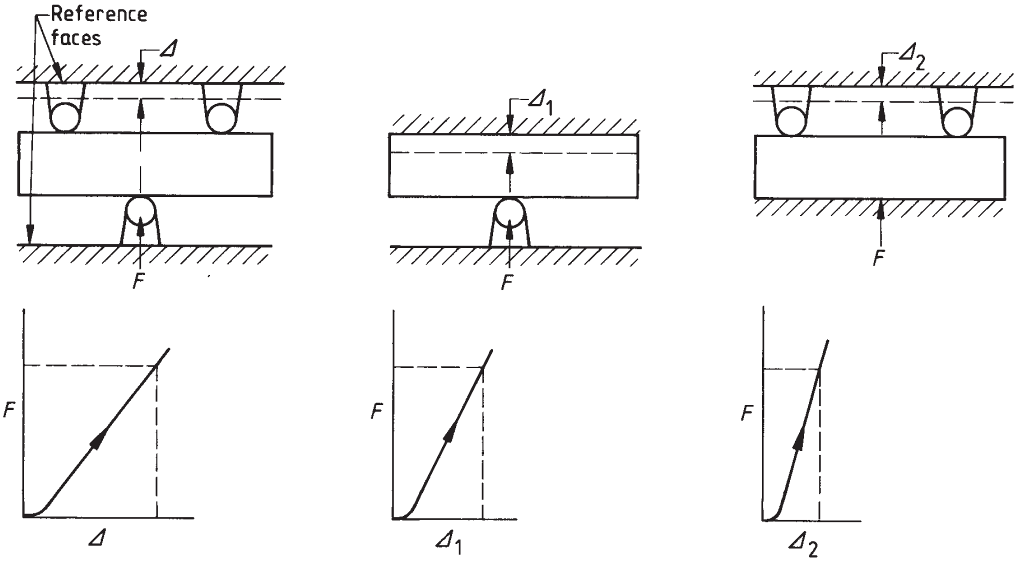

Figure B.2 — Displacements associated with three-point bend specimens

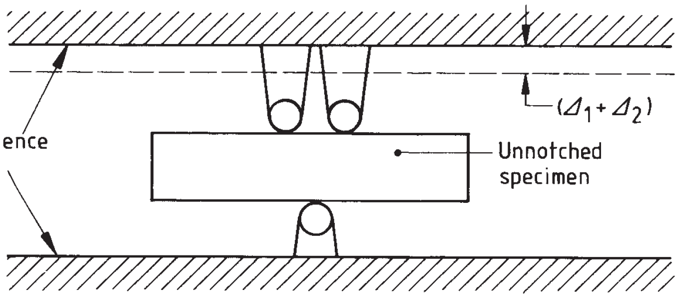

Figure B.3 — Simultaneous determination of extraneous displacements ($z_2 - z_1$)

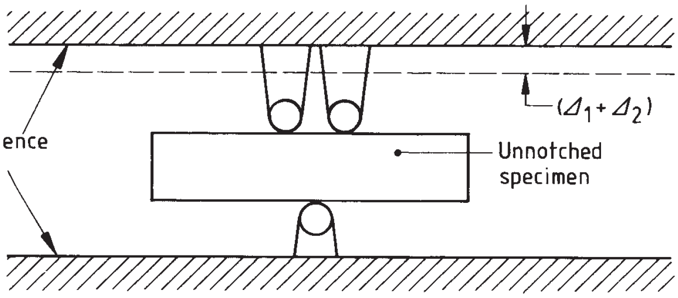

Figure B.4 — Location of two notch opening displacement measurements (V_1 and V_2) for the determination of load-line displacement

Annex C (normative)
Crack plane identification

The system of crack plane identification described in this annex shall be used in order to avoid ambiguous interpretation. It is based on an arrangement of three reference axes related to the main stressing direction as follows:

- — X is longitudinal, i.e. parallel to grain flow;
- — Y is transverse, i.e. normal to X and Z axes;
- — Z is short transverse, i.e. coincident with the thickness direction.

Using a two-letter code, the first letter shall indicate the direction perpendicular to the crack plane and the second the direction of crack front movement.

X-Z represents a crack in a longitudinal specimen moving in a short transverse direction. Figure C.1 shows the system applied to a rectangular section.

In order to identify crack planes in cylindrical sections the same code system shall be applied. This system is illustrated in Figure C.2

Cracks moving in planes not coincident with two of the reference axes shall be similarly referenced. When the plane of the crack is coincident with a primary reference with direction of propagation at an angle to the other two, the combination can be written X-YZ where the specimen is longitudinal and the direction transverse/short transverse. Similarly a skewed plane but primary direction could be represented by YZ-X. Examples are shown in Figure C.3.

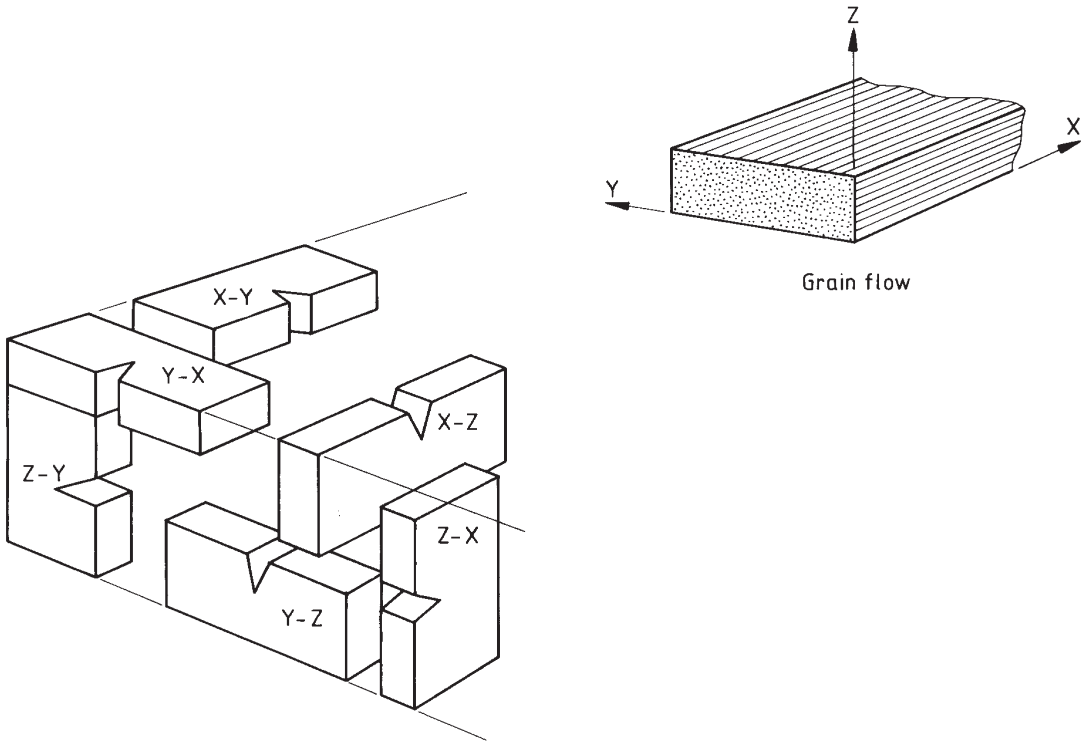

Figure C.1 — Basic fracture plane identification — Rectangular section

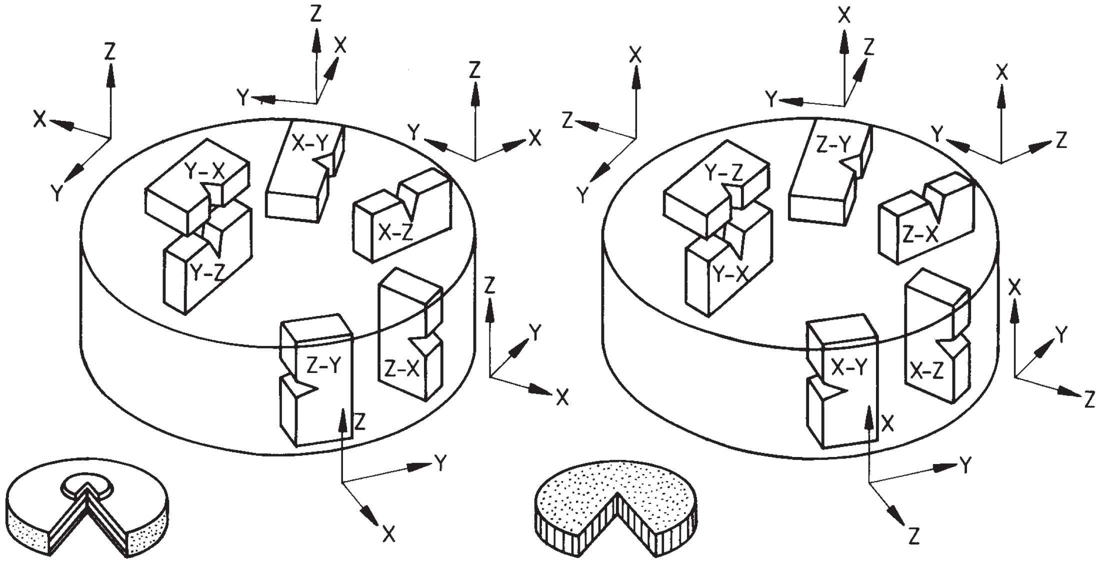

Figure C.2 — Basic fracture plane identification — Cylindrical sections

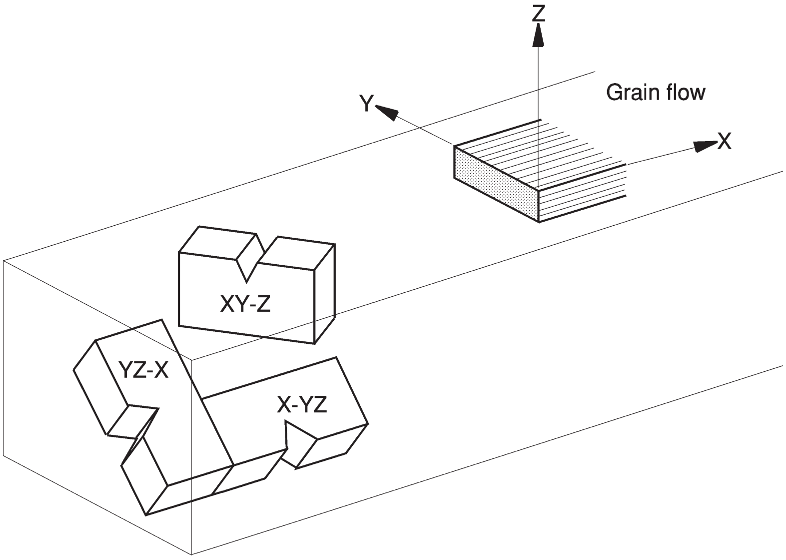

Figure C.3 — Non-basic fracture plane identification

Annex D (normative) Recommended methods for checking response of transducers and recorders

D.1 General

Before a dynamic determination can be carried out it is essential to establish that the mechanical and electronics test equipment is capable of accurately recording the dynamic events. Since the term dynamic includes a wide variety of test velocities, it is necessary to determine the maximum test velocity for a given testing system, or to evaluate the performance of a system for a given test velocity.

NOTE The rapidly changing signals occurring in dynamic fracture testing are only accurately handled up to a characteristic frequency limit. The limitations of the testing system depend on the frequency response of the load and displacement transducers, the signal conditioners and amplifiers and the records used.

This frequency limit shall be established so that borderline and higher test velocities can be avoided.

The check on frequency response shall be performed using one of the following methods:

a) Check on the complete test system with a dummy specimens (see **D.2**);

b) Calculate the frequency response of each individual component of the test system separately at the point where the signal amplitude is reduced by 10 % or by 30 % (see **D.3**). The frequency response of the notch opening displacement gauge and load cell can be determined from their resonant frequency;

c) By the use of a function generator, determine the response of the electronic parts of the test system with a ramp function (see **D.4**).

D.2 Check on the system using a dummy specimen

The complete testing system shall be checked by performing a determination on a dummy specimen which is known to fracture at a maximum load in a brittle manner as shown in Figure 13 type (1). The determination shall be carried out with the same testing rate and equipment settings used in an actual test. The records obtained from the load cell and notch opening displacement gauge shall then be analysed as follows to check the performance of the system.

The signal change corresponding to force and notch opening gauge displacement change at the moment of fracture ought to be abrupt (see Figure D.1 and Figure D.2). The slope of the record after fracture ought to be significantly greater than before fracture.

NOTE 1 An increase in the slope by a factor of four is considered to be a suitable criterion.

NOTE 2 If this requirement is satisfied, the response of the transducers and recorders are acceptable and other checks are unnecessary.

NOTE 3 The procedure followed here is based on a proposal made by the IIW Commission X, UK Briefing Group on Dynamic fracture. This is discussed in *An inter-laboratory programme of dynamic fracture toughness tests* [1].

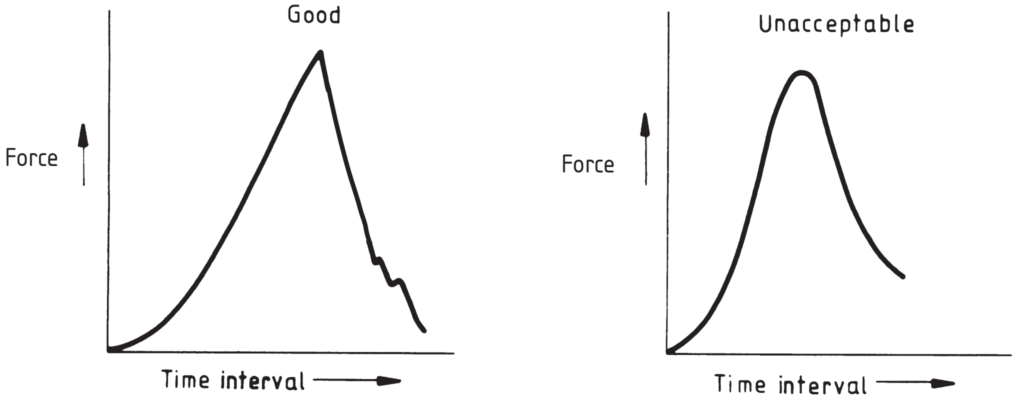

Figure D.1 — Examples of good and unacceptable force records

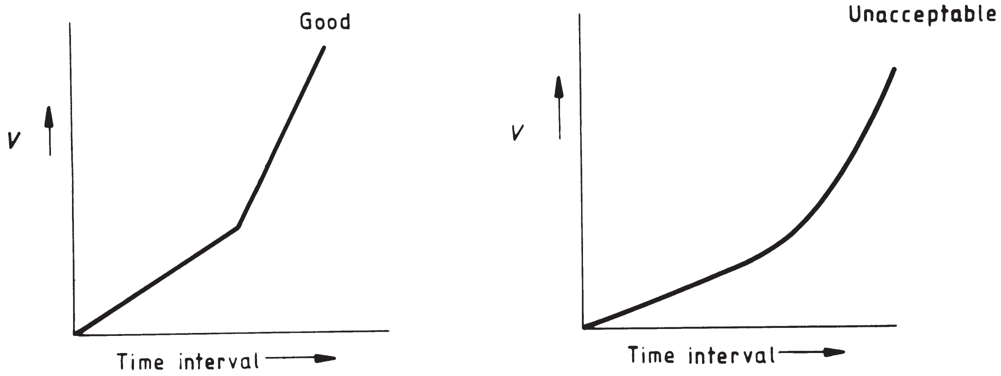

Figure D.2 — Examples of good and unacceptable notch opening displacement records

D.3 Determination of the frequency response of the individual instruments

NOTE There is no basic difference between the determination of the frequency response at the point where the signal amplitude is reduced by 10 % and the point where the signal amplitude is reduced by 30 %. This procedure describes auxiliary equipment, recommended connections for d.c. circuits, useful frequency-response indicators and appropriate data displays. A recommended procedure for assessing the natural frequency of the mechanical testing system is also included.

D.3.1 *D.C. (electrical resistance strain gauge) signal conditioners and amplifiers*

D.3.1.1 *General*

A sinewave function generator with signal-amplitude and continuous-frequency adjustment shall be used to carry out the determination. The maximum signal amplitude shall be approximately 10 V and the frequency range shall cover at least 1 Hz to 10^5 Hz.

NOTE 1 The absolute accuracy of the signal amplitude is not critical since relative values form the basis for frequency-response characterization.

As most d.c. conditioner modules have common-mode amplifiers, attempts to determine their frequency-response using a function generator as a substitute for the transducer signal may fail. Any common-mode component of the function-generator input to the d.c. circuit causes the amplifier to influence the d.c. circuit frequency response. For this reason, the transducer shall be disconnected and a resistor having the same value as the resistance seen by the signal conditioner (usually 120 Ω or 350 Ω) shall be substituted across the signal-input connections. The output of an isolated (above ground) function generator shall then be connected with the resistor at the transducer cable connector (see Figure D.3).

NOTE 2 A recommended method of isolating the function generator is to use a battery powered unit which is not in contact with a grounded surface or wire.

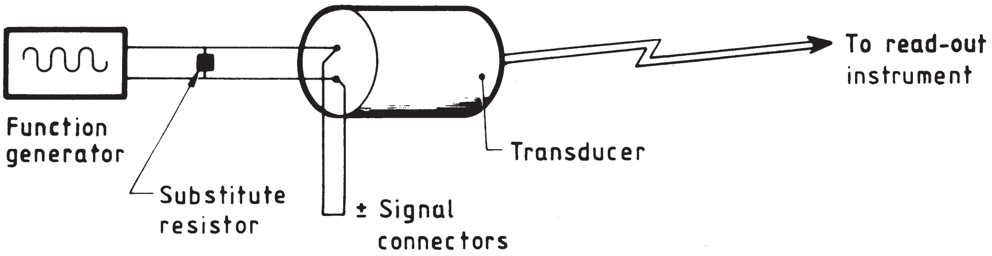

Figure D.3 — Test system for d.c. signal conditioners and amplifiers

D.3.1.2 *Procedure for d.c. signal conditioners and amplifiers*

Disconnect the transducer and connect a function generator to the transducer output signal leads of the cable connector.

Adjust the signal conditioner amplifier output to approximately half or three-quarters of the full-range signal at a low frequency such as 10 Hz. The conditioner output signal shall be monitored by the read-out equipment (oscilloscope, transient recorder, tape etc.) used for the fracture test. This signal level shall be monitored simultaneously with readout equipment.

Increase the frequency and monitor the output signal amplitude until the amplitude is reduced to about half the initial value, making sure that the input signal of the signal generator has not changed.

Plot the ratio of the input to output signal amplitude (A_i/A_o) against frequency on semilog graph paper (see Figure D.4).

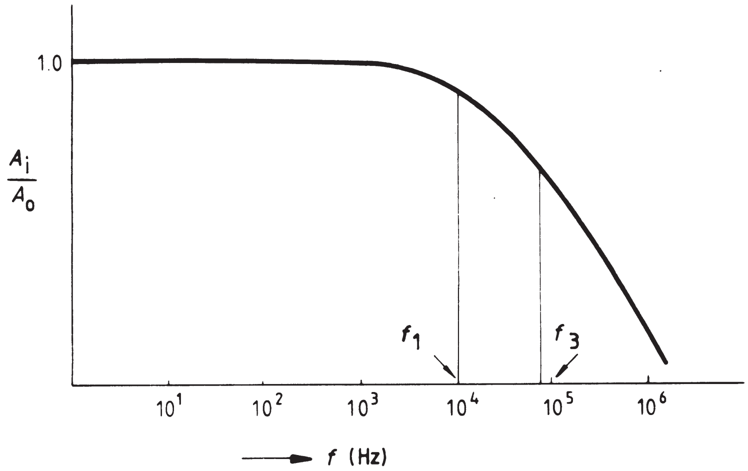

Figure D.4 — Example of the amplitude output of an instrument as a function of frequency

Determine the electrical frequency f_1 or f_3 at which the output signal amplitude is reduced, from its original value, by 10 % or 30 % respectively.

Calculate the rise time interval t_r (in s), for the circuit, using Equation D.1 if f_1 is known and Equation D.2 if f_3 is known, as follows:

$$t_r = \frac{0.35}{f_1} \tag{D.1}$$

$$t_r = \frac{0.34}{f_3} \tag{D.2}$$

During the test, the minimum failure time interval (in s) that can be measured reliably is given by Equation D.3 when using f_1 and Equation D.4 when using f_3.

$$t_f = 1.5t_{rm} \tag{D.3}$$

$$t_f = 10t_r \tag{D.4}$$

NOTE The factor 10 is an estimate from the International Institute of Welded (IIW) Commission X, Briefing group on dynamic fracture. This is discussed in *An inter-laboratory programme of dynamic fracture toughness tests* [1].

D.3.2 *A.C. (linear variable displacement transformer) signal conditioners and amplifiers*

The frequency response of a.c. circuits is more complex than for d.c. circuits and shall be estimated or determined experimentally. The estimation method uses an estimated percentage of the carrier frequency of the transducer conditioner module. For example, 15 % of the carrier frequency could be taken as the limiting frequency response of the circuit. Since a.c. conditioners exhibit a wide variety of performance characteristics, it might not be appropriate to use this percentage value for all conditioners.

NOTE The limit of 15 % of the carrier frequency is based as a proposal from ASTM Committee E 24 and is discussed in *Critical review of instrumented impact testing* [2].

The experimental method measures the frequency response of the filtering circuit in the conditioner module which controls the overall response of the module. Since a.c. conditioner modules are not all alike, only a general approach can be recommended. A function generator signal can be injected into the a.c. circuit just ahead of the filters, and the output signal monitored and analysed as described for the d.c. circuit in **D.3.1.2**. A modulated function phased to the carrier signal can be put into the conditioner module via the transducer cable, and the module output monitored and analysed as before. To carry out this determination, a multiplier or magnetic amplifier is needed which accepts the carrier signal and multiplies it with a variable-control signal. The output of this multiplier is variable in amplitude and frequency. An example of a possible test system is given in Figure D.5 with a variable-control signal. The output of this multiplier is variable in amplitude and frequency.

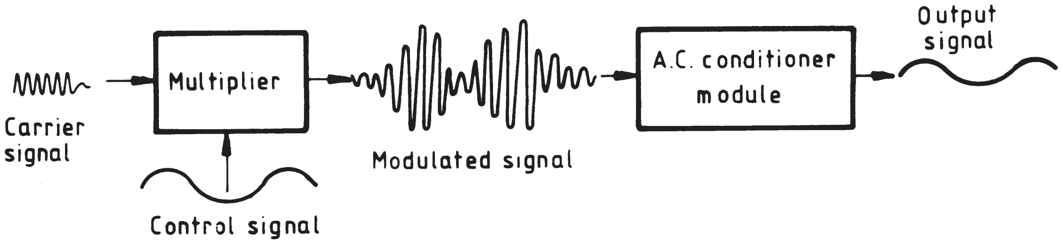

Figure D.5 — Test system for a.c. transducers

D.3.3 *Determination of the frequency response of the notch opening displacement gauge and the load cell*

Having determined the frequency response and rise time interval of the transducer instrumentation, the displacement transducer and load cell responses shall be determined. A means of determining the natural frequency of a notch opening gauge is to pluck the gauge and record the output versus time on an oscilloscope. The load cell can be tapped and the output shall be recorded against time interval on an oscilloscope. The minimum failure time interval t_f shall be calculated using Equation D.5.

$$t_f = \frac{3}{\text{measured natural frequency}} \tag{D.5}$$

NOTE In this case, t_f should be greater than both t_c and t_r determined for the instrumentation being used with the transducers.

These values shall be recorded on the test sheets for each specimen tested.

D.4 Determination of the response of the electronic parts of the system using a ramp function

To apply this method it is necessary to use a ramp function as input for the electronic instruments. It is essential that the rate of change of this ramp function is equal to or higher than the rate of change of the signal during an actual test. The output of the instrument under test shall be compared with the original signal by means of a suitable instrument (i.e. a fast oscilloscope).

NOTE Electronic connections are similar to those described in **D.3.2** and **D.3.3**.

D.5 Conclusions

In all the methods described some assumptions have been made. The most accurate method is probably the one that uses the dummy specimen (see **D.2**), since the total test system is checked. The other methods can be used to reveal the limitations of individual components of the total test system.

Annex E (informative)
Abbreviated method for determination of dynamic tensile properties of metallic materials

E.1 General

This method might be less accurate than the methods described in and BS EN 10002-1:1990 and ISO 6892.

An approximate equivalent strain rate to that in the fracture toughness test is calculated using Equation E.1.

$$\dot{\varepsilon} = \sigma_{\mathrm{YS}}(\mathrm{E}t_{\mathrm{a}})^{-1} \tag{E.1}$$

where

σ_{YS} is the 0.2 % proof strength at the temperature of the fracture toughness determination;

E is Young's modulus of elasticity at the temperature of the fracture toughness determination;

t_{a} is the time interval of the initial linear part of the force-time record from the fracture toughness determination (see Figure 20).

The strain rate $\dot{\varepsilon}$ applied during the determination of the dynamic 0.2 % proof strength should be within ±50 % of the above, calculated value.

E.2 Principle

The test pieces and their preparation are as specified in BS EN 10002-1:1990. The measuring equipment should meet the requirements of the main body of this standard. In addition, the elastic stiffness of the test frame should be sufficiently higher than that of the specimen to ensure compliance with the restrictions below.

The main difference with BS EN 10002-1:1990 is that an extensometer is not essential. If overall displacement is measured, the strain rate is calculated by dividing the displacement rate $\dot{D}$ by the parallel length of the test piece L_{c}. If extensometer displacement is measured, the strain rate is calculated by dividing the displacement rate by the extensometer gauge length of the test piece L_{e}. The linearity of the displacement gauge shall be as specified in **8.5**. Force is measured by a calibrated device which is not subject to plastic deformation and is as near to the gauge length as possible to ensure compliance with the restrictions below.

A plot of force versus time interval and either extensometer displacement or total displacement is made during the test. From these records the strain rate and dynamic tensile properties are determined as described in **E.3**.

E.3 Specimen test temperatures

If the fracture toughness test temperature is known and is below ambient the dynamic tensile test should be carried out in accordance with **9.4** if the temperature can be maintained up to the maximum load.

NOTE In the case of dynamic tensile tests it is unlikely that temperature control can be administered due to the short test duration.

E.4 Determination of the tensile properties and the displacement rate

If there is no distinct yield point then either:

— Draw a line on the force versus time interval curve between the point at which permanent plastic deformation is first observed F_e and that at which the force is half this value, $F_e/2$ (see Figure E.1). Construct an offset line parallel to the above elastic loading rate at a distance of $0.02L_c/\dot{D}$ or $0.002L_e/\dot{D}$ if an extensometer is used.

or

— Draw a line on the force versus displacement curve between F_e and $F_e/2$. Construct an offset line parallel to the above elastic loading line at a distance $L_c \times 0.002L_c$ or $0.002L_e$ if an extensometer is used.

Calculate the 0.2 % proof strength by dividing the force F_t at the point of intersection of the offset line with the curve of the test record by the original cross sectional areas of the test piece S_o.

If a distinct yield point is observed, calculate the yield strength by dividing the mean force between the lower and the upper limit of yielding extension by S_o (see Figure E.2).

Calculate the tensile strength by dividing the maximum force observed after yield or plastic deformation F_{TS} by S_o.

Calculate the displacement rate from the best-fit mean line of the displacement versus time interval record (see Figure E.3) between the time at which the force is $F_e/2$ and the time at which the force is F_{TS}.

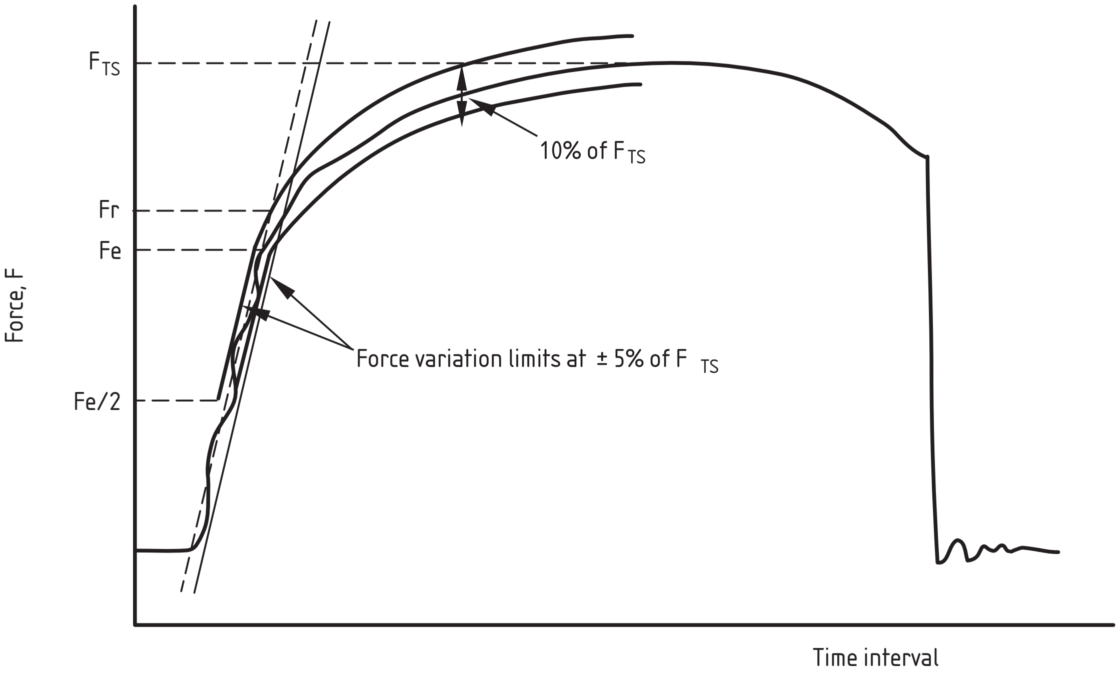

Figure E.1 — Force versus time record from dynamic tensile test showing no distinct yield point

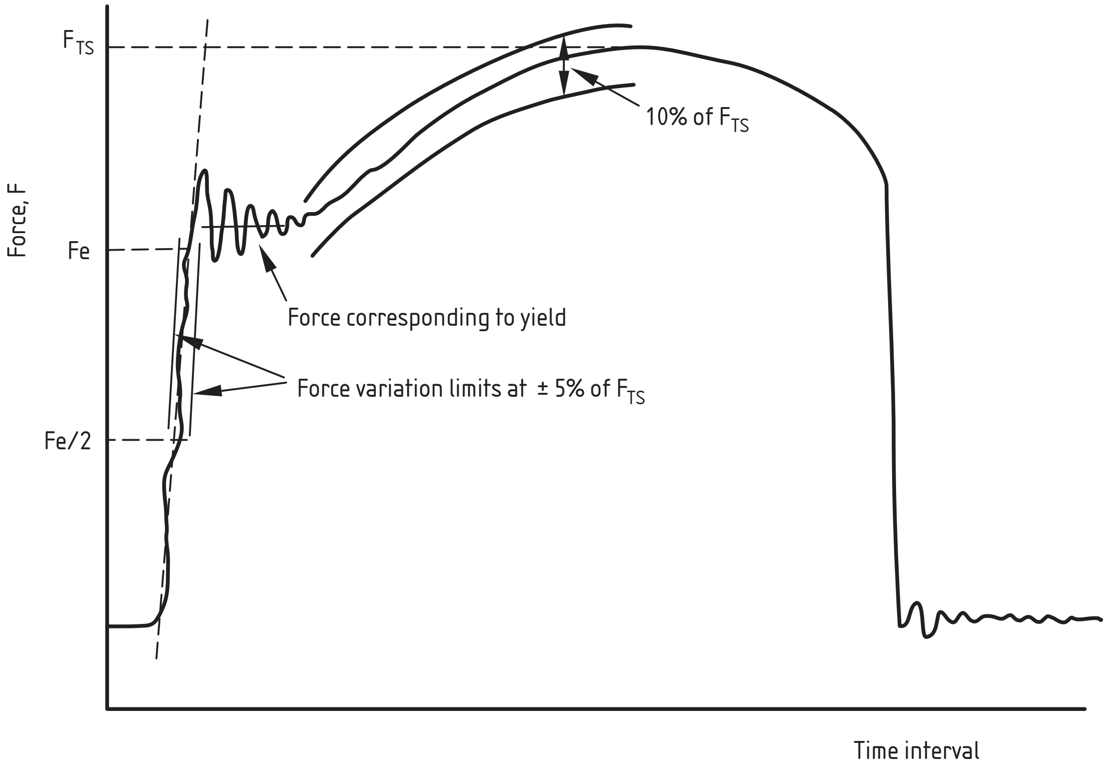

Figure E.2 — Force versus time record from dynamic tensile test showing distinct yield point

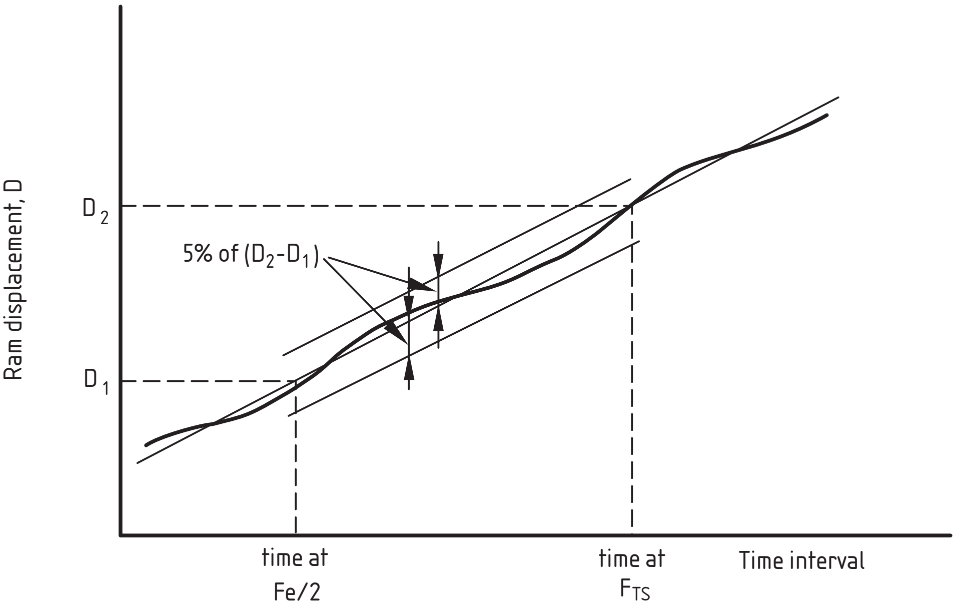

Figure E.3 — Limits to ram displacement versus time record from dynamic tensile test

E.5 Restrictions

The constructions illustrated in Figure E.1, Figure E.2 and Figure E.3 are made as follows:

Draw lines parallel to the elastic loading line between $F_e/2$ and F_e at a distance of 5 % of F_{TS} on either side of it.

If no distinct yield point is observed draw a smooth envelope equidistant without inflexion and of width equal to 10 % of F_{TS} around the curve of the test record from F_e to F_{TS} (see Figure E.1).

If a distinct yield point is observed draw a smooth envelope equidistant without inflexion and of width equal to 10 % of F_{TS} around the curve of the test record from the upper limit of yielding extension of F_{TS} (see Figure E.2).

Draw lines parallel to the displacement versus time interval record between the time at $F_e/2$ and the time at F_{TS} at a distance of 5 % of the displacement change between $F_e/2$ and F_{TS} on either side of it (see Figure E.3).

The curves of the test records should lie within the boundaries described above.

The time interval between the force at fracture and subsequent zero force shall be less than the force at fracture divided by the elastic loading rate.

Bibliography

Standards publications

ASTM E813-87, *Standard test method for* J_{IC} *— A measure of fracture toughness.*

BS 7448-1:1991, *Fracture mechanics toughness tests — Part 1: Method for determination of* K_{Ic}*, critical CTOD and critical J values of metallic materials.*

BS 7448-2, *Fracture mechanics toughness test — Part 2: Method for determination of* K_{Ic}*, critical CTOD and critical J values of welds in metallic materials.*

BS 7910, *Guide on methods for assessing the acceptability of flaws in metallic structures.*

BS EN 10002-1:1990, *Tensile testing of metallic materials — Part 1: Method of test at ambient temperature.*

BS EN 10002-4:1995, *Tensile testing of metallic materials — Part 4: Verification of extensometers used in uniaxial testing.*

ISO 15579, *Metallic materials — Tensile testing at low temperatures.*

ISO 6892, *Metallic materials — Tensile testing at ambient temperature*s.

Other publications

[1] Christopher, P. *An inter-laboratory programme of dynamic fracture toughness tests.* Proceedings of the 5th International Conference on Fracture (ICF5) Advances in Fracture Research, 1 March 1981.

[2] Ireland, D.R. *Critical review of instrumented impact testing.* International Conference on Dynamic Fracture Toughness, Paper 5, July 1976. The Welding Institute.

Further reading

Rice J. R. *A path independent integral and the approximate analysis of strain concentration by notches and cracks.* Journal of Applied Mechanics, 1968, 35, 379.

Dawes, M.G. *Quantifying pop-in severity in fracture toughness tests.* Fracture and Fatigue of Engineering Materials and Structures, 1991. 14 (10), 1007-10014.

Strawley J E. *Wide range stress intensity factor expressions for ASTM E399 standard fracture toughness specimens.* International Journal of Fracture, 1976, **12** (3), 475.

Dawes, M.G. *Elastic-plastic fracture toughness based on the CTOD and J-contour integral concepts.* Symposium on elastic-plastic fracture, 1977, ASTM Special Technical Publication 668, p307.

Willoughby, A.A. and Garwood, S.J. *On the unloading compliance method of deriving a single-specimen R-curve in three point bending.* In Second symposium on elastic-plastic fracture, 1983, ASTM Special Technical Publication 8.3, vol.2, p372.

BSI — British Standards Institution

BSI is the independent national body responsible for preparing British Standards. It presents the UK view on standards in Europe and at the international level. It is incorporated by Royal Charter.

Revisions

British Standards are updated by amendment or revision. Users of British Standards should make sure that they possess the latest amendments or editions.

It is the constant aim of BSI to improve the quality of our products and services. We would be grateful if anyone finding an inaccuracy or ambiguity while using this British Standard would inform the Secretary of the technical committee responsible, the identity of which can be found on the inside front cover. Tel: +44 (0)20 8996 9000. Fax: +44 (0)20 8996 7400.

BSI offers members an individual updating service called PLUS which ensures that subscribers automatically receive the latest editions of standards.

Buying standards

Orders for all BSI, international and foreign standards publications should be addressed to Customer Services. Tel: +44 (0)20 8996 9001. Fax: +44 (0)20 8996 7001. Email: orders@bsi-global.com. Standards are also available from the BSI website at http://www.bsi-global.com.

In response to orders for international standards, it is BSI policy to supply the BSI implementation of those that have been published as British Standards, unless otherwise requested.

Information on standards

BSI provides a wide range of information on national, European and international standards through its Library and its Technical Help to Exporters Service. Various BSI electronic information services are also available which give details on all its products and services. Contact the Information Centre. Tel: +44 (0)20 8996 7111. Fax: +44 (0)20 8996 7048. Email: info@bsi-global.com.

Subscribing members of BSI are kept up to date with standards developments and receive substantial discounts on the purchase price of standards. For details of these and other benefits contact Membership Administration. Tel: +44 (0)20 8996 7002. Fax: +44 (0)20 8996 7001. Email: membership@bsi-global.com.

Information regarding online access to British Standards via British Standards Online can be found at http://www.bsi-global.com/bsonline.

Further information about BSI is available on the BSI website at http://www.bsi-global.com.

Copyright

This does not preclude the free use, in the course of implementing the standard, of necessary details such as symbols, and size, type or grade designations. If these details are to be used for any other purpose than implementation then the prior written permission of BSI must be obtained.

Details and advice can be obtained from the Copyright & Licensing Manager. Tel: +44 (0)20 8996 7070. Fax: +44 (0)20 8996 7553. Email: copyright@bsi-global.com.

BSI
389 Chiswick High Road
London
W4 4AL