BS EN 61000-4-22:2011

BSI Standards Publication

Electromagnetic compatibility (EMC)

Part 4-22: Testing and measurement techniques — Radiated emission and immunity measurements in fully anechoic rooms (FARs)

...making excellence a habit.™

National foreword

This British Standard is the UK implementation of EN 61000-4-22:2011. It is identical to IEC 61000-4-22:2010.

The UK participation in its preparation was entrusted by Technical Committee GEL/210, EMC - Policy committee, to Subcommittee GEL/210/12, EMC basic, generic and low frequency phenomena Standardization.

A list of organizations represented on this committee can be obtained on request to its secretary.

ISBN 978 0 580 61971 7

ICS 33.100.10; 33.100.20

Compliance with a British Standard cannot confer immunity from legal obligations.

This British Standard was published under the authority of the Standards Policy and Strategy Committee on 31 May 2011.

Amendments issued since publication

Amd. No.	Date	Text affected

EUROPEAN STANDARD
NORME EUROPÉENNE
EUROPÄISCHE NORM

EN 61000-4-22

April 2011

ICS 33.100.10; 33.100.20

English version

Electromagnetic compatibility (EMC) - Part 4-22: Testing and measurement techniques - Radiated emission and immunity measurements in fully anechoic rooms (FARs)

(IEC 61000-4-22:2010)

Compatibilité électromagnétique (CEM) - Partie 4-22: Techniques d'essai et de mesure - Mesures de l'immunité et des émissions rayonnées dans des enceintes complètement anéchoïques (FAR)
(CEI 61000-4-22:2010)

Elektromagnetische Verträglichkeit (EMV) - Teil 4-22: Prüf- und Messverfahren - Messungen der gestrahlten Störaussendung und Prüfungen der Störfestigkeit gegen gestrahlte Störgrößen in Vollabsorberräumen (FAR)
(IEC 61000-4-22:2010)

This European Standard was approved by CENELEC on 2011-02-01. CENELEC members are bound to comply with the CEN/CENELEC Internal Regulations which stipulate the conditions for giving this European Standard the status of a national standard without any alteration.

Up-to-date lists and bibliographical references concerning such national standards may be obtained on application to the Central Secretariat or to any CENELEC member.

This European Standard exists in three official versions (English, French, German). A version in any other language made by translation under the responsibility of a CENELEC member into its own language and notified to the Central Secretariat has the same status as the official versions.

CENELEC members are the national electrotechnical committees of Austria, Belgium, Bulgaria, Croatia, Cyprus, the Czech Republic, Denmark, Estonia, Finland, France, Germany, Greece, Hungary, Iceland, Ireland, Italy, Latvia, Lithuania, Luxembourg, Malta, the Netherlands, Norway, Poland, Portugal, Romania, Slovakia, Slovenia, Spain, Sweden, Switzerland and the United Kingdom.

CENELEC
European Committee for Electrotechnical Standardization
Comité Européen de Normalisation Electrotechnique
Europäisches Komitee für Elektrotechnische Normung

Management Centre: Avenue Marnix 17, B - 1000 Brussels

Foreword

The text of document CISPR/A/912/FDIS, future edition 1 of IEC 61000-4-22, prepared by CISPR SC A, Radio-interference measurements and statistical methods, was submitted to the IEC-CENELEC parallel vote and was approved by CENELEC as EN 61000-4-22 on 2011-02-01.

Attention is drawn to the possibility that some of the elements of this document may be the subject of patent rights. CEN and CENELEC shall not be held responsible for identifying any or all such patent rights.

The following dates were fixed:

– latest date by which the EN has to be implemented at national level by publication of an identical national standard or by endorsement	(dop)	2011-11-01
– latest date by which the national standards conflicting with the EN have to be withdrawn	(dow)	2014-02-01

Annex ZA has been added by CENELEC.

Endorsement notice

The text of the International Standard IEC 61000-4-22:2010 was approved by CENELEC as a European Standard without any modification.

In the official version, for Bibliography, the following note has to be added for the standard indicated:

[2] IEC 61000-4-3:2006 + A1:2007	NOTE Harmonized as EN 61000-4-3:2006 + A1:2008 (not modified).

Annex ZA
(normative)

Normative references to international publications with their corresponding European publications

The following referenced documents are indispensable for the application of this document. For dated references, only the edition cited applies. For undated references, the latest edition of the referenced document (including any amendments) applies.

NOTE When an international publication has been modified by common modifications, indicated by (mod), the relevant EN/HD applies.

Publication	Year	Title	EN/HD	Year
CISPR 16-1-1	2010	Specification for radio disturbance and immunity measuring apparatus and methods - Part 1-1: Radio disturbance and immunity measuring apparatus - Measuring apparatus	EN 55016-1-1	2010
CISPR 16-1-4	2010	Specification for radio disturbance and immunity measuring apparatus and methods - Part 1-4: Radio disturbance and immunity measuring apparatus - Antennas and test sites for radiated disturbance measurements	EN 55016-1-4	2010
IEC 60050-161	1990	International Electrotechnical Vocabulary (IEV) - Chapter 161: Electromagnetic compatibility	-	-
IEC 60050-394	2007	International Electrotechnical Vocabulary (IEV) - Part 394: Nuclear instrumentation - Instruments, systems, equipment and detectors	-	-

CONTENTS

INTRODUCTION

This standard is part of the IEC 61000 series of standards, according to the following structure:

Part 1: General
  General considerations (introduction, fundamental principles)
  Definitions, terminology

Part 2: Environment
  Description of the environment
  Classification of the environment
  Compatibility levels

Part 3: Limits
  Emission limits
  Immunity limits (in so far as they do not fall under the responsibility of the product committees)

Part 4: Testing and measurement techniques
  Measurement techniques
  Testing techniques

Part 5: Installation and mitigation guidelines
  Installation guidelines
  Mitigation methods and devices

Part 6: Test set-up
Part 9: Miscellaneous

Each part is further subdivided into several parts, published either as international standards, as technical specifications or technical reports, some of which have already been published as sections. Others will be published with the part number followed by a dash and a second number identifying the subdivision (example: IEC 61000-6-1).

This part is an international standard that establishes the required test procedures for using fully anechoic rooms for performing radiated immunity testing and radiated emission measurements.

The main text of this standard provides all information that is common to both radiated emission measurements and immunity tests in a FAR (fully anechoic room). This includes the description of a FAR, a common set-up for equipment under test (EUT), and a harmonized validation/calibration procedure. The test methods described in this standard are based on the harmonized validation/calibration which verifies a FAR as a measurement system, including the room, antenna and associated cables simultaneously. The validation procedure determines a combined transducer factor for a FAR measurement system that is later applied to both emission measurements and immunity tests. If different sets of antennas and/or cables are used for emission measurements and immunity tests the validation/calibration process is performed twice.

Annex A (normative) provides the measurement procedure and any special considerations for performing radiated immunity tests.

Annex B (normative) provides the measurement procedure and any special considerations for performing radiated emission measurements.

Annex C (informative) provides background on the system transducer factor and simultaneous emissions/immunity validation method.

Annex D (informative) provides guidance for calculation of the uncertainty of measurement results obtained using a FAR and instrumentation in accordance with ISO/IEC Guide 98-3 [4][1].

---

[1] Numbers in square brackets refer to the Bibliography.

ELECTROMAGNETIC COMPATIBILITY (EMC) –

Part 4-22: Testing and measurement techniques – Radiated emissions and immunity measurements in fully anechoic rooms (FARs)

1 Scope

This part of IEC 61000 considers immunity tests and emission measurements for electric and/or electronic equipment. Only radiated phenomena are considered. It establishes the required test procedures for using fully anechoic rooms for performing radiated immunity testing and radiated emission measurements.

NOTE In accordance with IEC Guide 107 [1], IEC 61000-4-22 is a basic EMC publication for use by product committees of the IEC. As stated in Guide 107, product committees are responsible for determining the applicability of the EMC standards. TC 77 and CISPR and their sub-committees are prepared to cooperate with product committees in the determination of the value of particular EMC tests for specific products.

This part establishes a common validation procedure, equipment under test (EUT) set-up requirements, and measurement methods for fully anechoic rooms (FARs) when both radiated electromagnetic emission measurements and radiated electromagnetic immunity tests will be performed in the same FAR.

As a basic measurement standard, this part of IEC 61000 does not intend to specify the test levels or emission limits to be applied to particular apparatus or system(s). Its main goal is to provide general measurement procedures to all concerned product committees of IEC or CISPR. Specific product requirements and test conditions are defined by the responsible product committees.

The methods described in this standard are appropriate for radiated emission measurements and immunity tests in the frequency range of 30 MHz to 18 GHz.

2 Normative references

The following referenced documents are indispensable for the application of this document. For dated references, only the edition cited applies. For undated references, the latest edition of the referenced document (including any amendments) applies.

CISPR 16-1-1:2010, *Specification for radio disturbance and immunity measuring apparatus and methods – Part 1-1: Radio disturbance and immunity measuring apparatus – Measuring apparatus*

CISPR 16-1-4:2010, *Specification for radio disturbance and immunity measuring apparatus and methods – Part 1-4: Radio disturbance and immunity measuring apparatus – Ancillary equipment – Radiated disturbances*

IEC 60050-161:1990, *International Electrotechnical Vocabulary (IEV) – Part 161: Electromagnetic compatibility*

IEC 60050-394:2007, *International Electrotechnical Vocabulary (IEV) – Part 394: Nuclear instrumentation – Instruments, systems, equipment and detectors*

3 Terms and definitions

For the purposes of this document, the terms and definitions in IEC 60050-161, as well as the following, apply.

3.1
ancillary equipment
transducers (e.g. current and voltage probes and artificial networks) connected to a measuring receiver or (test) signal generator and used in the disturbance signal transfer between the EUT and the measuring or test equipment

3.2
associated equipment
AE
apparatus that is not part of the system under test, but needed to help exercise the EUT

3.3
average system transducer factor
$\overline{C}_{\mathrm{dB}}$
factor that converts a voltage at the system source/receive termination point to field strength induced or received; this parameter is calculated from the FAR validation data separately for horizontal and vertical polarization

NOTE Average system transducer factor is expressed in dB(1/m).

3.4
calibration
set of operations that establish, under specified conditions, the relationship between values of quantities indicated by a measuring instrument or measuring system, or values represented by a material measure or a reference material, and the corresponding values realized by standards

[IEC 60050-394, 394-40-43]

3.5
forward power
$P_{\mathrm{f},x}$
power to a FAR test system, recorded during the measurement of the field at a single position, x, in the test volume

NOTE Forward power is expressed in watts (W).

3.6
fully anechoic room
FAR
shielded enclosure, the entire internal surface of which is lined with radio-frequency absorbing material (RF-absorber), which absorbs electromagnetic energy in the frequency range of interest

3.7
fully anechoic room test system
FAR test system
test system comprised of a FAR and a means to generate and/or measure electromagnetic fields

NOTE Most typically this is comprised of a FAR, an antenna and other ancillary equipment and cabling.

3.8
measurement distance

$d_{\text{measurement}}$

distance used for EUT measurement/testing and measured from the reference point of the transmit/receive antenna to the periphery of the EUT at its closest point on the measurement axis

NOTE Measurement distance is expressed in metres (m) and is illustrated in Figures A.1 and B.1.

3.9
normalized forward power

$P_{\text{fn},x}$

forward power required to generate an electric field strength of 1 V/m at a position, x, in the test volume

NOTE Normalized forward power is expressed in watts (W).

3.10
polarization

orientation of the electric field vector of a linearly polarized radiated field

3.11
reference distance

$d_{\text{reference}}$

distance at which a limit is specified

3.12
test volume

maximum volume in a FAR in which the EUT and its cabling may be positioned

NOTE See Clause 6 for additional details.

3.13
validation

process of confirming that a finalized instrumentation and control system (hardware and software) complies with all of its functional, performance and interface requirements

[IEC 60050-394, 394-40-42]

3.14
validation distance

$d_{\text{validation}}$

distance used for validation/calibration measurements and measured from the reference point of the transmit/receive antenna to the test volume at its closest point on the measurement axis

4 FAR applications

4.1 Measurand for radiated immunity testing

Most electronic equipment is, in some manner, affected by electromagnetic radiation. This radiation is frequently generated by such general-purpose sources as the small handheld radio transceivers that are used by operating, maintenance and security personnel, fixed-station radio and television transmitters, vehicle radio transmitters, and various industrial electromagnetic sources.

In the frequency range covered by this standard, far-field conditions cannot be established in all cases (e.g. at the lower frequencies), and therefore the disturbance quantity simulating the real electromagnetic phenomenon is defined by the quantity “electrical field strength” in this standard.

The measurand to establish the desired disturbance quantity for immunity tests is the electric field strength (carrier) established by using the average system transducer factor $\overline{C}_{\mathrm{dB}}$ at $d_{\mathrm{measurement}}$. The measurand is obtained separately for the horizontal and vertical polarizations.

4.2 Measurand for radiated emission measurements

The measurand in a FAR for radiated emission measurements is the field strength radiated by the EUT and obtained at the measurement distance $d_{\mathrm{measurement}}$ by the use of a linearly-polarized antenna and applying the average system transducer factor, $\overline{C}_{\mathrm{dB}}$, to the maximum voltage measured at the receive termination point. The measurand is obtained separately for the horizontal and vertical polarizations of the receiving antenna, and expressed as a result at the reference distance, $d_{\mathrm{reference}}$, specified in product standards.

5 FAR validation/calibration procedure

5.1 General

This clause provides the performance requirements and harmonized FAR validation procedure for both radiated emission measurements and radiated immunity tests.

5.2 Validation set-ups

Figures 1 to 4 show block diagrams of set-ups that can be used alternatively for the validation procedure. All set-up variants have a transducer reference point (p_{TR}) for which the average system transducer factor (see 5.4) is determined by the validation process.

The primary instrumentation required for each of these set-ups is summarized in the following bulleted list, and described further in the subsequent lettered list.

- Type 1 (Figure 1): signal generator, spectrum analyzer or power meter, field probe
- Type 2 (Figure 2): signal generator, spectrum analyzer or power meter, reference antenna
- Type 3 (Figure 3): network analyzer, reference antenna
- Type 4 (Figure 4): network analyzer, power amplifier, reference antenna

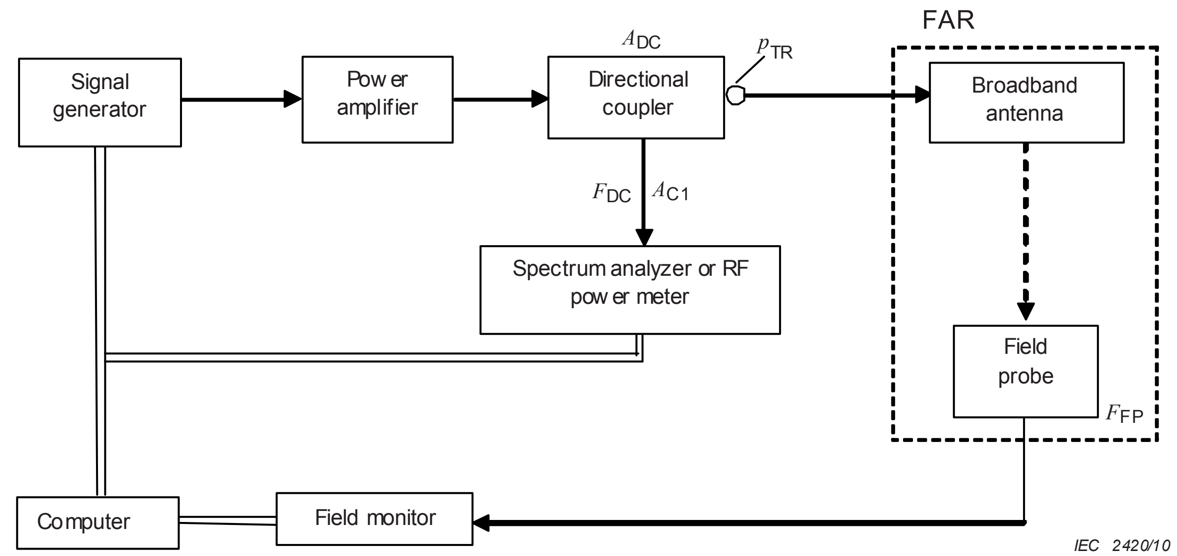

IEC 2420/10

Key:

A_{C1}	Attenuation of the cable between the directional coupler and the spectrum analyzer or power meter (dB)
F_{FP}	Calibration factor of the field probe (in linear scale)
A_{DC}	Attenuation of the directional coupler between power input and power output (dB)
F_{DC}	Coupling loss of the directional coupler between power input and forward power output (dB)
p_{TR}	Transducer reference point

Figure 1 – Type 1 validation block diagramme

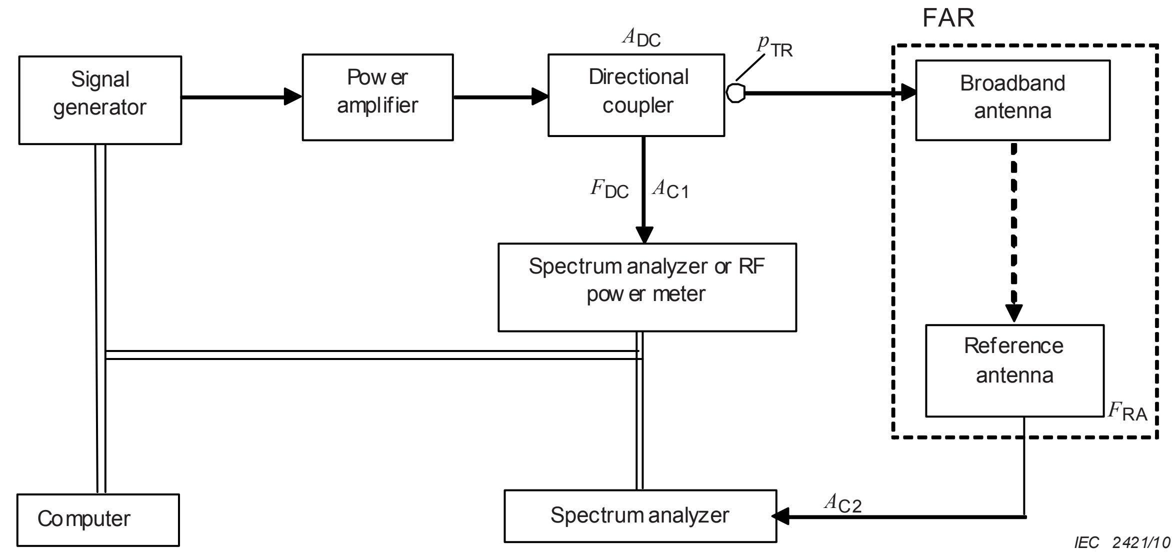

IEC 2421/10

Key:

A_{C1}	Attenuation of the cable between the directional coupler and the spectrum analyzer or power meter (dB)
A_{C2}	Attenuation of the cable between the reference antenna and the spectrum analyzer (dB)
F_{RA}	Antenna factor of the reference antenna [dB(1/m)]
A_{DC}	Attenuation of the directional coupler between power input and power output (dB)
F_{DC}	Coupling loss of the directional coupler between power input and forward power output (dB)
p_{TR}	Transducer reference point

Figure 2 – Type 2 validation block diagramme

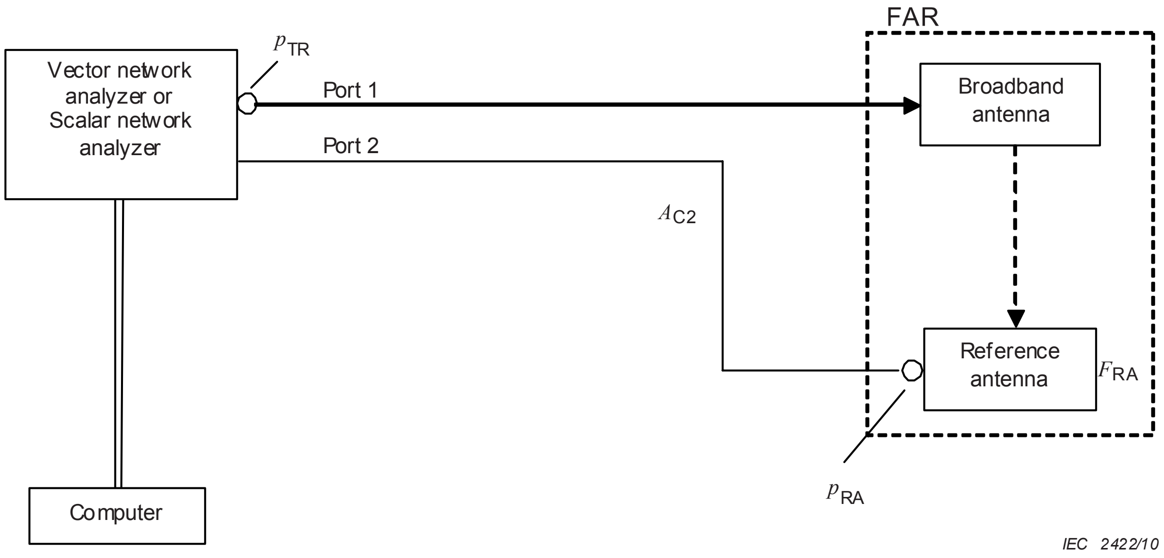

Key:

F_{RA}	Antenna factor of the reference antenna [dB(1/m)]
A_{C2}	Attenuation of the cable between the reference antenna and the spectrum analyzer (dB)
p_{RA}	Reference point of the reference antenna
p_{TR}	Transducer reference point

NOTE Alternatively, the attenuation of the cable between the reference antenna and the network analyzer may be determined by normalization of the network analyzer (p_{TR} and p_{RA} are connected for normalization).

Figure 3 – Type 3 validation block diagramme

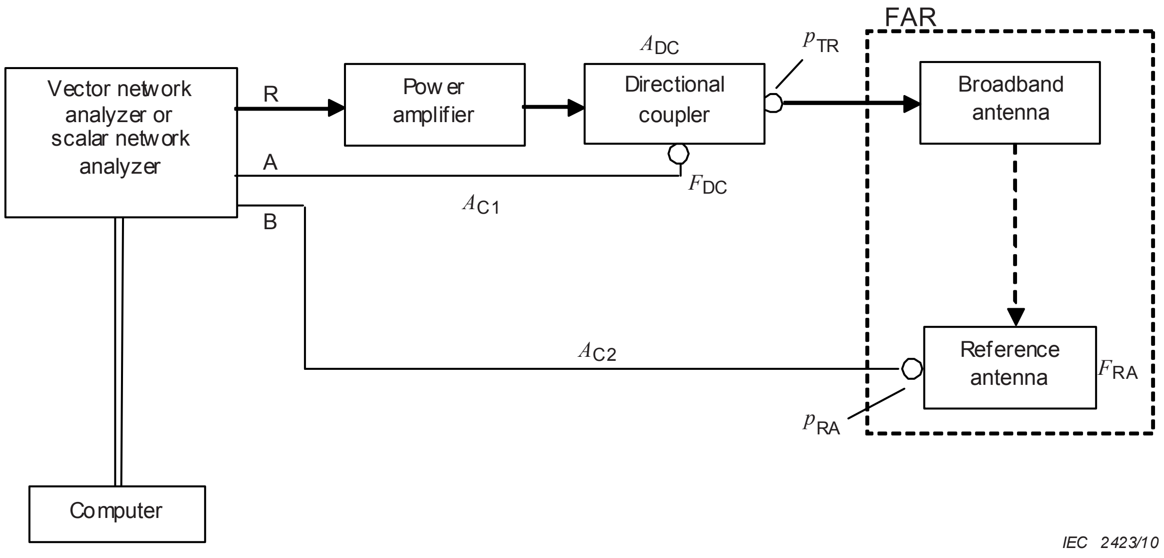

Key:

A_{C1}	Attenuation of the cable between the directional coupler and the spectrum analyzer or power meter (dB)
A_{C2}	Attenuation of the cable between the reference antenna and the spectrum analyzer (dB)
F_{RA}	Antenna factor of the reference antenna [dB(1/m)]
A_{DC}	Attenuation of the directional coupler between power input and power output (dB)
F_{DC}	Coupling loss of the directional coupler between power input and forward power output (dB)
p_{TR}	Transducer reference point
p_{RA}	Reference point of the reference antenna
R,A,B	Network analyzer ports – output port R, input ports A and B

Figure 4 – Type 4 validation block diagramme

The following components are part of a FAR validation set-up. A summary list of the components required for the different set-up types is given in Table 1.

a) Fully anechoic room (FAR)

The test volume and the validation distance shall be previously specified according to Figure 5 (see 5.5) and definitions 3.12, 3.14.

b) Broadband antenna

The position of the broadband antenna is fixed in the room.

NOTE 1 The antenna factor normally provided with the antenna is not required because it is determined as part of the FAR test system transducer factor during this validation/calibration.

c) RF power meter, frequency selective voltmeter, or spectrum analyzer

d) Directional coupler

e) Isotropic field probe and monitor

f) Reference antenna

The reference antenna shall conform to the specifications in 5.4.2.3 of CISPR 16-1-4 for the frequency range 30 MHz to 1 GHz and 8.3.3.1 of CISPR 16-1-4 for the frequency range 1 GHz to 18 GHz.

g) Cable to broadband antenna

Routing to the broadband antenna shall be fixed in the installation.

NOTE 2 The loss of the cable to the broadband antenna is determined as part of the FAR system transducer factor during this validation/calibration.

NOTE 3 The cable to the broadband antenna is typically recommended to be installed horizontally from the antenna to the absorbers lined on the back wall, then installed vertically against the absorbers to the floor. This is to minimize the influence of the cable.

h) Other RF cables

The characteristics of other RF cables shall be determined in previous calibration. Any differences between the cables utilized for this calibration and subsequent testing may be separately characterized.

i) Signal source

RF generator, able to produce a stable signal.

j) Power amplifier

The output power shall be monitored during this validation/calibration and during immunity tests (see 5.2 c) and d)). Refer to Annex A for consideration of harmonics and compression characteristics.

k) Scalar or vector network analyzer

Instrument for the measurement of the transfer function between two points (S_{21}) or the ratio of two signals (without bridge).

Table 1 – Components required for the different validation set-up types

Component[1)]	Validation set-up[2)]			
	Type 1	Type 2	Type 3	Type 4
a) Fully anechoic room (FAR)	x	x	x	x
b) Broadband antenna	x	x	x	x
c) RF power meter	x	x	–	–
d) Directional coupler	x	x	–	x
e) Isotropic field probe and monitor	x	–	–	–
f) Reference antenna	–	x	x	x
g) Cable to broadband antenna	x	x	x	x
h) Other RF cables	x	x	x	x
i) Signal source	x	x	–	–
j) Power amplifier	x	x	–	x
k) Scalar or network analyzer	–	–	x	x

1) Letters preceding a component correspond with items detailed in 5.2.

2) “x” indicates component is required; “–“ indicates component is not required.

5.3 Test facility description

5.3.1 General

For the purposes of FAR validation, the parameters of 5.3.2 through 5.3.8 shall be specified and clearly documented using text descriptions and photographs in the validation report.

5.3.2 Test volume

The test volume is a cylinder that shall encompass the EUT maximum dimensions including its associated cables, as described in Clause 6. The following parameters of the specified test volume shall be clearly defined: diameter of volume, location of the centre of the volume bottom surface, and height.

5.3.3 Broadband antenna

The broadband antenna shall be located at a fixed position outside the test volume within a FAR. The antenna height is typically set to the height of the centre of the test volume. The broadband antenna is used as the receiving antenna for emission measurements and as the transmitting antenna for the validation/calibration tests and subsequent immunity tests. The validation/calibration process shall be performed for each set of antennas (e.g. to cover various frequency ranges) used for either immunity testing or emission measurements.

5.3.4 Antenna cables

Reflections from antenna cables can affect results obtained in FAR testing, so consideration should be given to their design and placement. The lengths of antenna cables located within a FAR and leading to the broadband antenna shall be laid out in the same manner during validation of a FAR as they are during product tests in a FAR. Any ferrites placed on the antenna cable shall be present for both validation testing and subsequent EUT testing.

5.3.5 Set-up table

Set-up tables made from nonconductive and low permittivity materials are recommended. A set-up table that is designed for installation in the test volume and is removable does not need to be in-place during the facility validation described in 5.6. A set-up table that is located outside of the test volume and always used for EUT tests shall be considered as part of a FAR facility and shall be installed during the validation procedure of 5.6.

5.3.6 Turntable

The recommended minimum facility contains a remotely controlled turntable in the test volume. Validation/calibration of the facility shall be performed with the turntable, power feed and communication cabling in their typical locations, and as used for EUT testing.

5.3.7 Automated antenna polarization changer

A computer-controlled, automated antenna polarization changer is recommended, to reduce test time.

5.3.8 Absorber configuration

The absorber configuration used for the validation test must be the same as will be used for subsequent EUT testing.

5.4 Definition of quantities to be determined by the FAR validation procedure

The quantities to be determined for each sampling position from the FAR validation procedure are as described in this subclause. The system transducer factor, $C_{\mathrm{dB},x}$, in dB(1/m), for a single position denoted by x, is given by:

$$C_{\mathrm{dB},x} = 20\log(f_{\mathrm{MHz}}) - 15 - 10\log\left(\frac{{d_x}^2}{P_{\mathrm{fn},x}}\right) \tag{1}$$

where

f_{MHz} is the frequency in MHz;

d_x is the distance between the reference point of the broadband antenna and the reference point of the field probe or reference antenna, in m (see 5.5 for additional details);

$P_{\mathrm{fn},x}$ is the normalized forward power in W, given by:

$$P_{\mathrm{fn},x} = \frac{P_{\mathrm{f},x}}{E_x^2} \tag{2}$$

where

$P_{\mathrm{f},x}$ is the forward power at the transducer reference point p_{TR} in W;

E_x is the corresponding electric field strength at location x in V/m.

NOTE Annex C gives background and rationale about the relationships shown in Equations (1) and (2).

From the individual system transducer factors, $C_{\mathrm{dB},x}$, the average system transducer factor, $\overline{C}_{\mathrm{dB}}$, (as defined in 3.3) can be derived using Equation (3):

$$\overline{C}_{\mathrm{dB}} = \sum_{x=1}^{n} \frac{C_{\mathrm{dB},x}}{n} \tag{3}$$

where n is the number of sampling points, as determined according to the procedure of 5.5.

The standard deviation of the collected samples is calculated using Equation (4), and for each antenna polarization separately. This quantity is used for comparison to the validation criteria of 5.7.

$$s_{\mathrm{dB},C} = \sqrt{\frac{1}{n-1} \times \sum_{x=1}^{n} \left(C_{\mathrm{dB},x} - \overline{C}_{\mathrm{dB}} \right)^2} \tag{4}$$

The standard deviation of the average system transducer factor, $s_{\mathrm{dB},\overline{C}}$, is calculated using Equation (5), for each antenna polarization. This quantity is important for the estimation of uncertainty for subsequent EUT testing [i.e. see item 8 of D.1.3 and item 9 of D.2.4)].

$$s_{\mathrm{dB},\overline{C}} = \frac{s_{\mathrm{dB},C}}{\sqrt{n}} \tag{5}$$

5.5 Required sampling positions for FAR validation

For the procedure described in this subclause, the characteristics of a FAR are to be measured at multiple positions in a test volume, and the results expressed as an average system transducer factor and a standard deviation (see 5.4), separately for each antenna polarization (horizontal and vertical).

The FAR measurements and validation shall be performed for both horizontal and vertical antenna polarizations at the following positions (see Figure 5):

a) At three heights of the test volume – bottom, middle and top:
   1) bottom height h_B, located at 25 % of the height of the test volume from the bottom. This height shall be a minimum of 20 cm when the test volume height is less than 80 cm, and shall be taken as 50 cm when the test volume height is more than 2 m;
   2) top height h_T, located at 25 % of the height of the test volume from the top; this height shall be a minimum of 20 cm when the test volume height is less than 80 cm, and shall be taken as 50 cm when the test volume height is more than 2 m;
   3) middle height, located at 50 % of the height of the test volume.
b) At five positions in all three horizontal planes – centre, left, right, front, and rear positions, in each horizontal plane.

The position in height of the broadband antenna outside of the test volume shall be set and remain fixed at the centre height of the test volume, as shown in Figure 5. The broadband antenna shall not be tilted, i.e. the boresight axis of the broadband antenna shall remain aligned along the primary measurement axis for all measurements. The field probe or reference antenna located in the test volume shall be oriented or tilted to face the broadband antenna. The position of the broadband antenna (including height) shall be the same as will be used later for equipment testing.

The distance between the reference point of the broadband antenna and the front position of the test volume is $d_\mathrm{validation}$. Any antenna masts and supporting floors or structures shall be in place during the validation procedure. Note that only the field probe or reference antenna is moved throughout the test volume with this procedure—the broadband antenna is not moved during the validation, therefore the actual separation distance between the broadband antenna and each sampling position, d_x, will vary depending on the sampling position. Note that the actual separation distance shall be recorded for each sampling position, and then used for d_x in Equation (1).

The sampling positions shall be located such that the phase centre of the reference antenna or field probe shall always be a minimum of 20 cm inside the test volume.

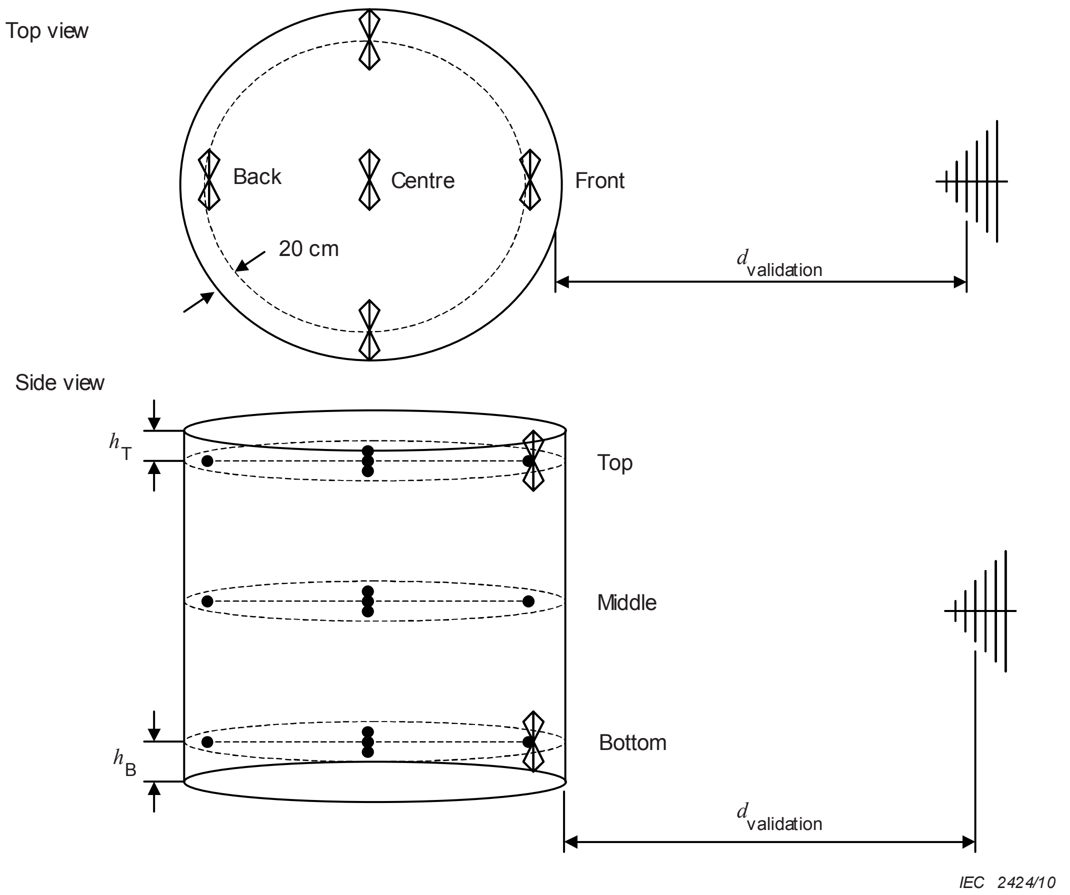

NOTE Parameters are described in 5.5. The cylinder formed by the solid lines represents the test volume.

Figure 5 – Locations of the sampling points for FAR validation

5.6 FAR validation procedure

5.6.1 General

Set up the measurement equipment as indicated in Figure 1, Figure 2, Figure 3 or Figure 4. Place the probe or reference antenna at one of the positions illustrated in Figure 5, and set the polarization of the broadband antenna to horizontal.

The specific steps used for each of the four set-up types of 5.2 are detailed in 5.6.2 to 5.6.5. Calculations of the average system transducer factor and standard deviation are covered in 5.6.6.

5.6.2 Type 1 validation set-up

The following steps shall be applied when using a Type 1 validation set-up.

a) Set the field probe to a single-axis mode, in order to measure the appropriate polarization.

b) Set the signal generator to the first frequency of interest.

c) Set the signal generator or amplifier output power to a fixed CW level that will provide a suitable validation field strength E_x. The measurement results are independent of the absolute field strength and/or power level.

NOTE 1 The signal generator and/or amplifier shall be operated at a power level below its maximum output level, to limit the possible influence of harmonics on the measurement results.

d) Record the following parameters:
   - power indicated at the power meter measurement point, $P_{\mathrm{f,ind},x}$, in dBm;
   - indicated field strength from the isotropic field probe, $E_{\mathrm{ind},x}$, in V/m;
   - distance, d_x, between the broadband antenna and the field probe.
e) Step the frequency in increments not to exceed 1 %, and repeat steps c) and d) until the last frequency is reached.
f) Compute the system transducer factor for position x and for each frequency using:

$$C_{\mathrm{dB},x} = 20\log(f_{\mathrm{MHz}}) - 15 \quad 20\log(d_x) + P_{\mathrm{f,ind},x} - 30 + A_{\mathrm{C1}} \quad F_{\mathrm{DC}} - A_{\mathrm{DC}} - 20\log(F_{\mathrm{FP}} \times E_{\mathrm{ind},x}) \tag{6}$$

NOTE 2 The parameters are defined in Figure 1.

g) Repeat steps a) through f) for each sampling position.
h) Repeat steps a) through g) for vertical polarization.

5.6.3 Type 2 validation set-up

The following steps shall be applied when using a Type 2 validation set-up.

a) Set the signal generator to the first frequency of interest.

   Set the signal generator or amplifier output power to a fixed CW level that will provide a suitable validation field strength E_x. The measurement results are independent of the absolute field strength and/or power level.

   NOTE 1 The signal generator and/or amplifier shall be operated at a power level below its maximum output level, to limit the possible influence of harmonics on the measurement results.

b) Record the following parameters:
   - power shown by the power meter, $P_{\mathrm{f,ind},x}$, in dBm;
   - indicated voltage from the spectrum analyzer, $V_{\mathrm{ind},x}$, in dB(µV);
   - distance, d_x, between the broadband antenna and the reference antenna.
c) Step the frequency in increments not to exceed 1 %, and repeat steps a) and b) until the last frequency is reached.
d) Compute the system transducer factor for position x and for each frequency using:

$$C_{\mathrm{dB},x} = 20\log(f_{\mathrm{MHz}}) - 15 \quad 20\log(d_x) + P_{\mathrm{f,ind},x} - 30 + A_{\mathrm{C1}} \quad F_{\mathrm{DC}} - A_{\mathrm{DC}} - E_{\mathrm{ind},x} \tag{7}$$

   where

$$E_{\mathrm{ind},x} = V_{\mathrm{ind},x} + A_{\mathrm{C2}} + F_{\mathrm{RA}} - 120 \tag{8}$$

   NOTE 2 The parameters are defined in Figure 2.

e) Repeat steps a) through d) for each sampling position.
f) Repeat steps a) through e) for vertical polarization.

5.6.4 Type 3 validation set-up

The following steps shall be applied when using a Type 3 validation set-up.

a) Prior to the measurement, do a normalization of the network analyzer.
b) Set the start and stop frequency of the network analyzer. The frequency stepping shall be:
   - For 30 MHz to 80 MHz: $f_{\mathrm{step}} \leq 1$ MHz.
   - For 80 MHz to 500 MHz: $f_{\mathrm{step}} \leq 2$ MHz.

- For 500 MHz to 1 GHz: $f_{\text{step}} \leq 5$ MHz.
- For 1 GHz to 18 GHz: $f_{\text{step}} \leq 50$ MHz.

c) Measure and record $S_{21,x}$, in dB.

d) Compute the system transducer factor for position x and for each frequency:

$$C_{\text{dB},x} = 20\log(f_{\text{MHz}}) - 32 \quad 20\log(d_x) - S_{21,x} - A_{\text{C2}} - F_{\text{RA}} \tag{9}$$

NOTE The parameters are defined in Figure 3.

e) Repeat steps a) through d) for each sampling position.

f) Repeat steps a) through e) for vertical polarization.

5.6.5 Type 4 validation set-up

The following steps shall be applied when using a Type 4 validation set-up.

a) Prior to the measurement, perform a normalization of the network analyzer.

b) Set the start and stop frequency of the network analyzer. The frequency stepping shall be:

  - For 30 MHz to 80 MHz: $f_{\text{step}} \leq 1$ MHz.
  - For 80 MHz to 500 MHz: $f_{\text{step}} \leq 2$ MHz.
  - For 500 MHz to 1 GHz: $f_{\text{step}} \leq 5$ MHz.
  - For 1 GHz to 18 GHz: $f_{\text{step}} \leq 50$ MHz.

c) Select an output power of the network analyzer that will provide a suitable validation field strength E_x. The measurement results are independent of the absolute field strength and/or power level.

d) Measure and record the signal ratio B/A ($R_{\text{BA},x}$, in dB).

e) Compute the system transducer factor for position x and for each frequency:

$$C_{\text{dB},x} = 20\log(f_{\text{MHz}}) - 32 \quad 20\log(d_x) - R_{\text{BA},x} + A_{\text{C1}} + F_{\text{DC}} \quad A_{\text{DC}} - A_{\text{C2}} \quad F_{\text{RA}} \tag{10}$$

NOTE The parameters are defined in Figure 4.

f) Repeat steps a) through e) for each location.

g) Repeat steps a) through f) for vertical polarization.

5.6.6 Calculation of $\overline{C}_{\text{dB}}$ and $s_{\text{dB},C}$ for all set-up types

For each polarization and frequency, calculate the average system transducer factor using Equation (3), and the standard deviation of the collected samples using Equation (4).

5.7 Validation requirement

The FAR validation requirement is based on the standard deviation of the sampled system transducer factors. The standard deviation $s_{\text{dB},C}$ for each polarization shall satisfy the criteria listed in Table 2.

Table 2 – Validation criteria

Frequency range	Validation criteria
30 MHz to 1 GHz	$s_{\mathrm{dB},C}$ ≤ 1,8 dB for all 15 sampling points
1 GHz to 18 GHz	$s_{\mathrm{dB},C}$ ≤ 1,8 dB for all 15 sampling points *OR both of the following criteria shall be met:* $s_{\mathrm{dB},C}$ ≤ 3 dB for all 15 sampling points and $s_{\mathrm{dB},C}$ ≤ 1,8 dB for the 10 points in the top and middle planes of the test volume

The validation is applicable as long as the test set-up used remains unchanged for subsequent EUT testing. Therefore the validation set-up (antenna, absorber set-up, cables, etc.) shall be fully documented.

6 Test set-up

Tests shall be performed with the EUT configured as closely as possible to its typical, practical end-use operating conditions. Unless stated otherwise, cables and wiring shall be as specified by the manufacturer, and the equipment shall be within its housing (or cabinet) with all covers and access panels in place. Any deviation from normal EUT operating conditions shall be fully described in the test report. When possible, the EUT set-up per manufacturer's specifications shall take precedence. The set-up is to be documented in the test report.

The set-up table height for table-top equipment or floor-standing equipment is not limited, provided that the equipment under test is entirely located within the test volume and the cable layout satisfies the following requirements.

a) Interface cables, loads, and devices should be connected to at least one of each type of the interface ports of the EUT and, where practical, each cable shall be terminated in a device typical for its actual use. Where there are multiple interface ports of the same type, a typical number of these ports shall be connected to devices or loads. It is sufficient to connect only one of the loads, provided that it can be shown, for example by preliminary testing, that the connection of further ports would not significantly increase the level of disturbance (that is, more than 2 dB) or significantly degrade the immunity level. The rationale for the configuration and loading of ports shall be documented in the test report.

The number of additional cables should be limited to the condition where the addition of another cable does not decrease the margin by 2 dB with respect to the limit.

NOTE In some cases the optimum arrangement of features, loads, interface types, and cables for emissions and immunity tests are different, which may result in the need for some reconfiguration of the EUT within the confines of the uniform EUT arrangement.

The cable layout and termination shall be according to the following requirements:

1) When a specific cable arrangement is required by the manufacturer installation instructions, the cables shall be routed in accordance with the installation requirements. When not specified, or in cases when the cables may be routed generally, the cables shall be oriented so that vertically and horizontally polarized radiation are not excluded.
2) A minimum cable length of 1,0 m of shall be routed in the test volume (unless the manufacturer's specifications require shorter cables). Excess cable lengths shall be bundled in the approximate centre of the length of the cable to form a bundle 30 cm to

40 cm in length. If no information is provided by the manufacturer about typical cable layout for normal use, the following arrangement shall be applied:

  i) For a table-top EUT (Figures 6 and 7), the cables leaving the test volume (that is, those that connect the EUT to the "outside world") shall be exposed to the electromagnetic field for a total length of at least 1 m.

  ii) For a floor-standing EUT (Figures 8 and 9), cables leaving the test volume shall be arranged with a length of at least 0,3 m run horizontally within the test volume, and with a vertical run according to typical, normal use (depending on the height of the I/O port above the bottom of the test volume).

b) Cables not connected to another device may be terminated as follows:

  1) Coaxial shielded cables shall be terminated with a coaxial termination (usually 50 Ω or 75 Ω).

  2) Shielded cables with more than one inner conductor should have common and differential mode terminations according to the EUT manufacturer's specifications. The common mode termination shall be connected appropriately between the inner conductors, or their differential mode termination, and the cable shield.

  3) Unshielded cables shall have differential mode termination according to the manufacturer's specifications.

c) The following additional items shall be considered for the EUT set-up:

  1) If the EUT needs associated equipment (AE, see definition 3.2) to operate properly, special care shall be taken to ensure that AE does not affect either radiated emission measurements nor radiated immunity tests. AE may be located outside the FAR during testing, if proper connecting interfaces are available on the room shielding. Measures to prevent RF-signal leakage into or out of the FAR through interconnection cable(s) may be necessary.

     NOTE 2 A device that simulates a telecommunications network is an example of AE. AE may be physically located outside the test environment.

  2) Other methods or equipment used to suppress unwanted emissions from AE shall be located outside the test room.

  3) The test set-up, including cable layout, specifications of attached cables and terminations, and other measures taken to suppress emissions from ancillary equipment outside the test volume, shall be clearly described in the test report.

  4) The EUT perimeter is drawn between the components of the EUT that are located in the test volume, i.e. where the validation requirement is satisfied. The EUT perimeter shall include the connecting cables between EUT components, but cables that leave the test volume shall not be considered as part of the EUT perimeter. Cables that leave the test volume must fulfil the layout requirements described in this subclause.

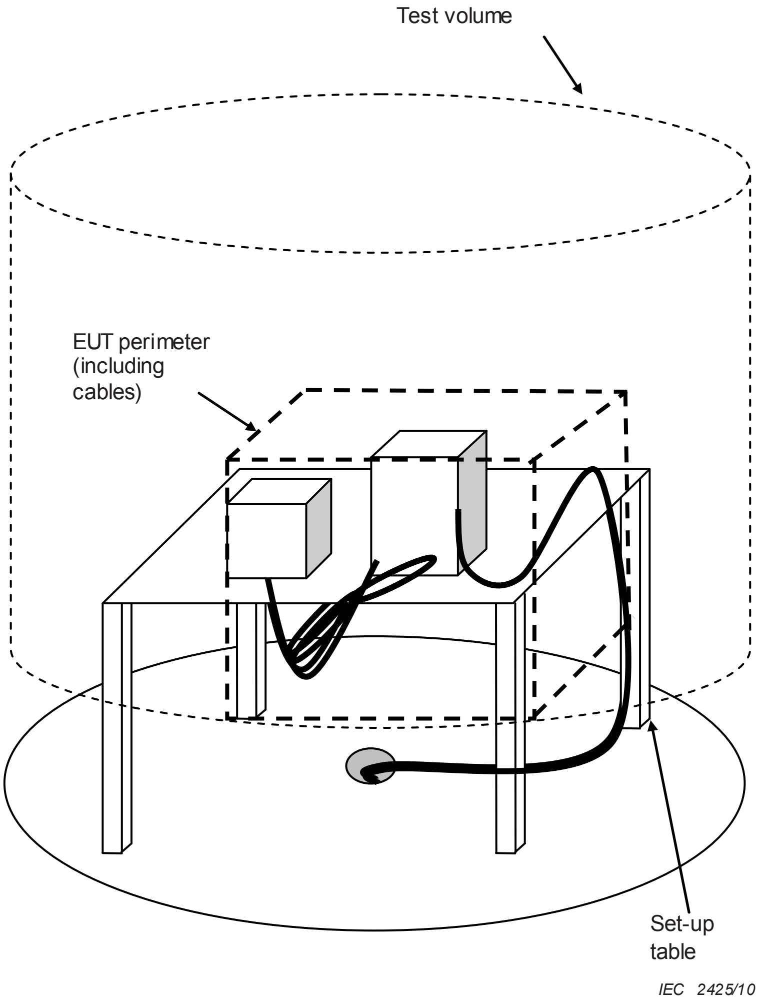

Figure 6 – Example test set-up for table-top equipment

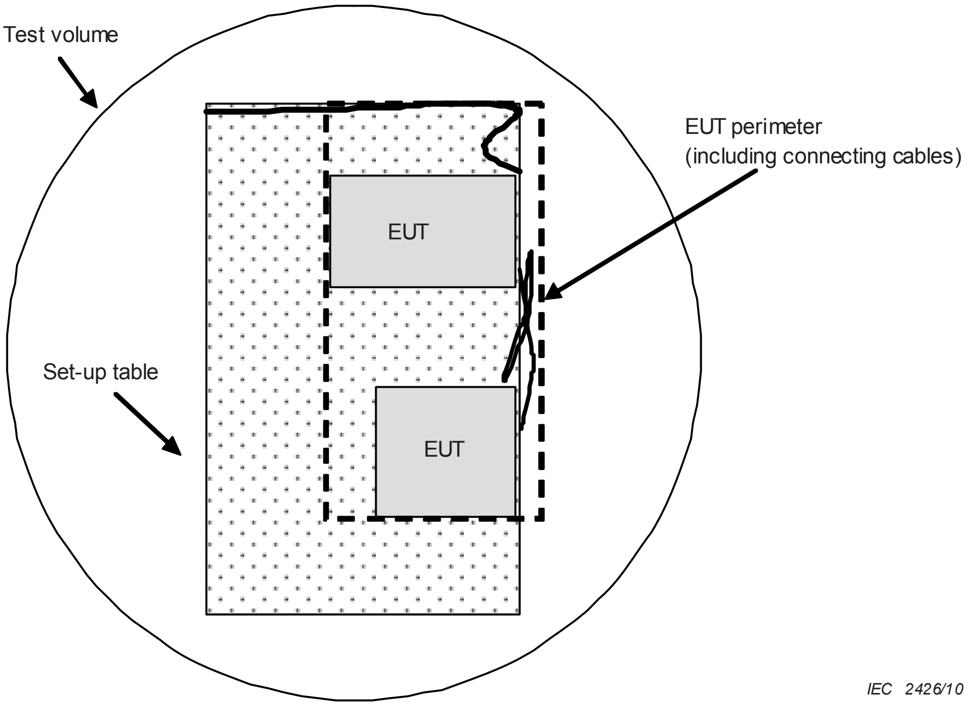

Figure 7 – Example test set-up for table-top equipment, top view

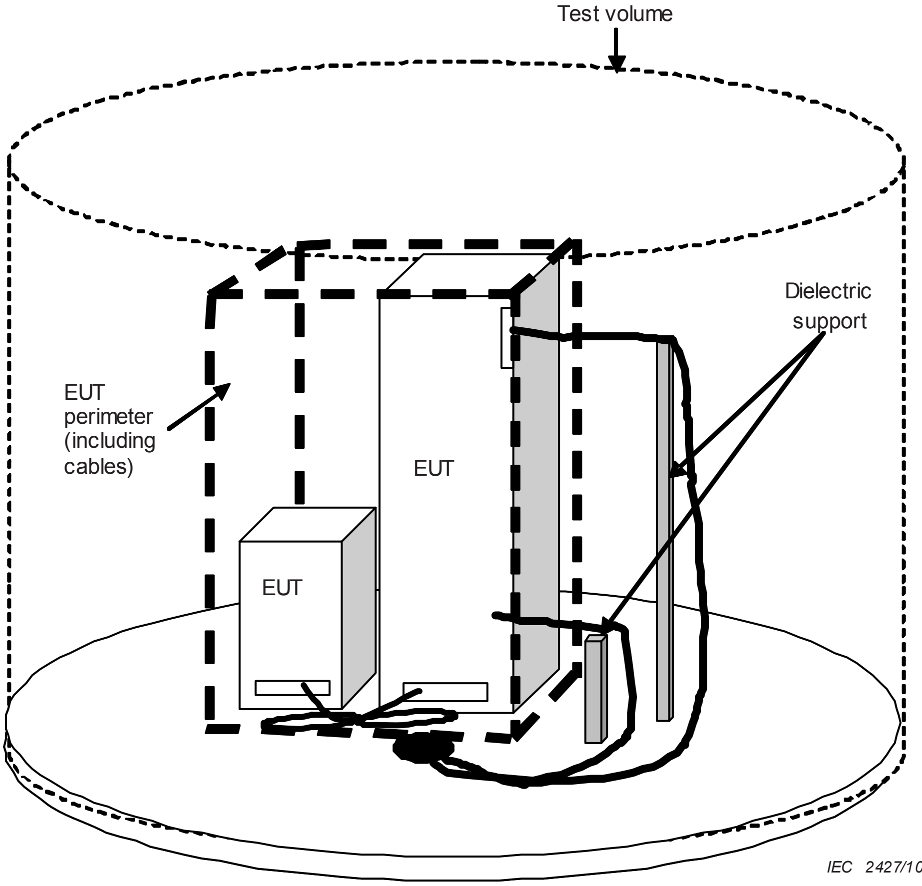

Figure 8 – Example test set-up for floor-standing equipment

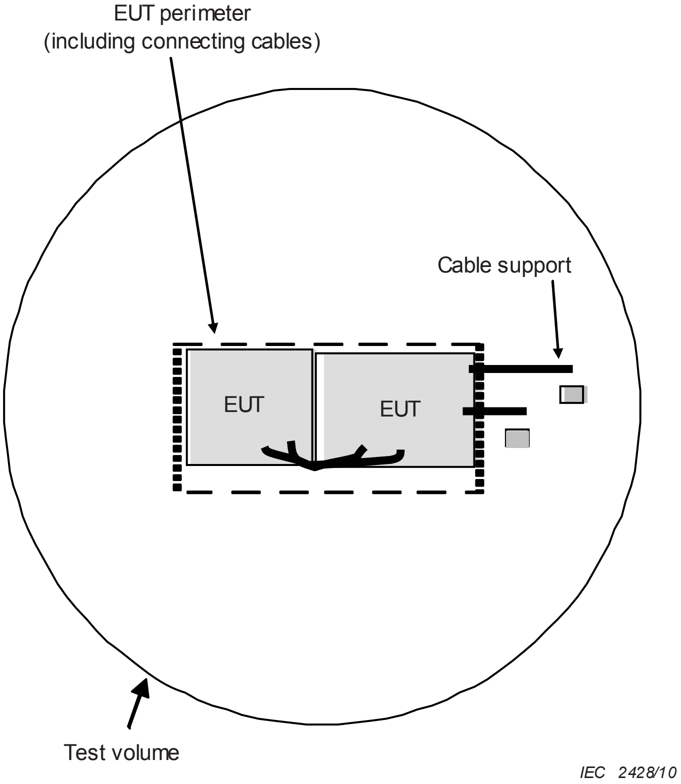

Figure 9 – Example test set-up for floor-standing equipment, top view

Annex A
(normative)

Radiated immunity tests

A.1 General

This annex describes the procedures for performing radiated immunity tests in a FAR.

A.2 Test equipment

The equipment used for immunity tests is shown in Figures 1 and 2 (see 5.2). The field probe or reference antenna is not needed for immunity tests. Other specific parameters are given in the following list.

- *RF signal generator(s)*: capable of covering the frequency band of interest, and of being amplitude modulated by a 1 kHz sine wave with a modulation depth of 80 %, or the modulation specified by the product standard.
- *Power amplifiers*: to amplify signal (unmodulated and modulated) and provide antenna drive to the necessary field level. The harmonics generated by the power amplifier shall be such that any measured field strength produced in a FAR at each harmonic frequency shall be at least 6 dB below that of the fundamental frequency.
- *EMC filters*: may be placed between power amplifier and directional coupler to avoid problems caused by harmonics. Care shall be taken to ensure that the filters introduce no additional resonance effects on the connected lines.
- *Directional coupler*: needed to measure the forward power to the antenna and reverse power from the antenna. Normally only the forward power is used for validation/calibration as well as for immunity tests. Nevertheless, it is meaningful to measure also the reverse power in order to detect missing or bad connections to the antenna.
- *Forward and reverse power meter or spectrum analyzer*: used in connection with the directional coupler to measure forward and reverse power.
- *Broadband antenna(s)*: biconical, log periodic, horn or any other linearly polarized antenna system capable of satisfying frequency requirements.

To monitor the EUT during the test, additional equipment shall be used as necessary. Suitable equipment for monitoring includes:

- Video system;
- Microphone system;
- Probe for voltages and/or currents;
- Probe for digital signals (e.g. RS232, RS485, CAN, Ethernet).

Care shall be taken that the monitoring equipment will not be influenced by the electromagnetic field produced in a FAR, and that it does not influence the behaviour of the EUT. Optical fibre or cables with sufficient common-mode RF decoupling are highly recommended for the signal transmission. Monitoring equipment should be placed outside of a FAR, if at all possible.

A.3 Quick saturation check procedure

This quick check sequence shall be performed to determine that the amplifier saturation is sufficiently low. This procedure shall be performed at least once during the validation procedure.

NOTE This check needs to be performed only for the highest test level.

a) Prepare the immunity test set-up as shown in Figure 1 or Figure 2 (see 5.2) starting with horizontal polarization of the broadband antenna.

b) Set the signal generator to the first test frequency.

c) Calculate the necessary forward power $P_{\mathrm{f,t,dBm}}$ (at the transmit reference point) from the average system transducer factor:

$$P_{\mathrm{f,t,dBm}} = 45 + 20\log(E_{\mathrm{t}}) + 20\log(d_{\mathrm{measurement}}) - 20\log(f_{\mathrm{MHz}}) + \overline{C}_{\mathrm{dB}} \qquad \text{(A.1)}$$

where

E_{t}	is the field strength intended as test level for the immunity test in V/m;
$d_{\mathrm{measurement}}$	is the distance between broadband antenna reference point and the nearest face of the EUT in m (see Figure A.1);
f_{MHz}	is the frequency in MHz;
$\overline{C}_{\mathrm{dB}}$	is the average system transducer factor (in dB/m) determined by the validation procedure.

The forward power is the power injected into the transducer reference point (p_{TR}, see Figures 1 and 2, in 5.2). To adjust the instrumentation to that injection power, the attenuation of the cables, coupling of the directional coupler, etc. need to be taken into account.

Because the required forward power is maximum for the smallest EUT (largest $d_{\mathrm{measurement}}$), the saturation check should be performed considering this worst-case situation.

d) Set the RF generator output power until the power meter reading corresponds to the desired forward power calculated in step c), within a certain tolerance band. Immunity test control software typically does this step automatically.

e) Record the power meter reading.

f) Increase the RF generator output by 5,1 dB (this takes into account the increase of the peak envelope power of an 80 % AM modulated signal).

g) Record the power meter reading and determine the difference from the power meter reading in step e). If this difference is within the interval 3,1 dB to 7,1 dB, the amplifier saturation is deemed to be acceptable. If the difference is less than 3,1 dB, or more than 7,1 dB, the amplifier is not suitable to produce the desired test field strength.

h) Increment the frequency by 1 % and repeat steps c) to g) until the last frequency has been reached.

i) Repeat steps b) to h) for vertical polarization of the broadband antenna.

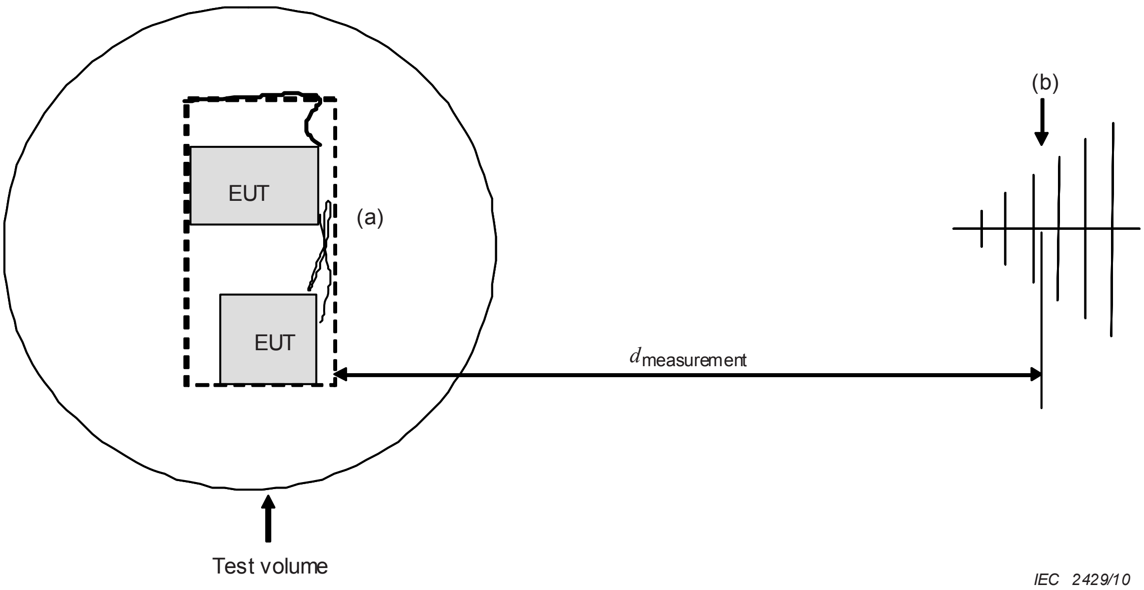

Key

(a)	EUT periphery nearest face, including cables
(b)	Broadband antenna reference point

Figure A.1 – Definition of $d_{\text{measurement}}$ for immunity tests

A.4 Test procedure

A.4.1 General

The test shall be carried out on the basis of a test plan that shall include the relevant operating modes and verification of the performances of the EUT, as defined in the technical specification

The EUT shall be arranged as described in Clause 6, and shall be in one of the operating modes defined in the test plan.

A.4.2 Level setting process

The necessary forward power $P_{\text{f,t,dBm}}$ (rms, carrier, at p_{TR}) to produce the test field strength, E_{t}, for each individual frequency, shall be calculated from the average system transducer factor $\overline{C}_{\text{dB}}$, i.e. using

$$P_{\text{f,t,dBm}} = 45 + 20\log(E_{\text{t}}) + 20\log(d_{\text{measurement}}) - 20\log(f_{\text{MHz}}) + \overline{C}_{\text{dB}} \qquad \text{(A.2)}$$

where $d_{\text{measurement}}$ is the distance between the reference point of the antenna to the nearest face of the EUT.

The control equipment shall set the RF generator such that the calculated forward power is reached within a power tolerance range.

NOTE 1 This power tolerance range is normally specified by the test engineer. It is a compromise between uncertainty (see Annex D) and time needed to exactly establish the necessary power.

The EUT is successively illuminated at four faces by rotation of the EUT. If it is intended that the EUT be operated in other orientations, the illumination shall also include the bottom and top faces of the EUT.

NOTE 2 If an EUT consists of several components, it is not necessary to modify the position of each component within the EUT arrangement while illuminating it from different sides.

The frequency ranges to be considered are swept or scanned with the signal modulated (AM 80 % with 1 kHz sine wave, or as specified in the product standard), pausing to set the RF signal level or to switch signal generators and antennas as necessary. Where the frequency range is stepped incrementally, the step size shall not exceed 1 % of the preceding frequency value.

The dwell time of the amplitude modulated carrier at each frequency shall not be less than the time necessary for the EUT to be exercised and to respond, but shall in no case be less than 0,5 s. The sensitive frequencies (e.g. clock frequencies) shall be analyzed separately according to the requirements in product standards.

The polarization of the field generated by each antenna necessitates testing each EUT face twice, once with the antenna positioned vertically and again with the antenna positioned horizontally.

Attempts shall be made to fully exercise the EUT during testing, and to evaluate all the critical exercise modes selected for the immunity test, as stated in the test plan.

The use of special exercising programmes is recommended. These programmes (or reference to controlled programme descriptions) shall be documented in the test report.

A.4.3 Test plan

The test plan shall specify the following items:

- size of the EUT;
- representative operating modes of the EUT;
- type(s) and number of interconnecting cables used, and the interface port (of the EUT) to which these are to be connected;
- performance criteria;
- description of the method used to monitor the EUT;
- frequency range, dwell time and frequency steps;
- test level to be applied.

A.4.4 Evaluation of test results

The test results shall be classified in terms of the loss of function or degradation of performance of the EUT, relative to a performance level defined by its manufacturer or the requester of the test, or as agreed between the manufacturer and the purchaser of the product. The recommended classification is as follows:

a) normal performance within limits specified by the manufacturer, requester or purchaser;
b) temporary loss of function or degradation of performance which ceases after the disturbance ceases, and from which the equipment under test recovers its normal performance, without operator intervention;
c) temporary loss of function or degradation of performance, the correction of which requires operator intervention;
d) loss of function or degradation of performance which is not recoverable, due to damage to hardware or software, or loss of data.

The manufacturer’s specification may define effects on the EUT that may be considered insignificant, and therefore acceptable.

This classification may be used as a guideline for formulating performance criteria, by committees responsible for generic, product and product-family standards, or as a framework for the agreement on performance criteria between the manufacturer and the purchaser, for example where no suitable generic, product or product-family standard exists.

A.5 Test report

The test report shall contain all the information necessary to reproduce the test. In particular, the following items shall be documented.

- items specified in the test plan required by A.4.3;
- identification of the EUT and any associated equipment, for example, brand name, product type, serial number;
- any specific conditions necessary to enable the test to be performed;
- any specific conditions of use, for example cable length or type, shielding or grounding, or EUT operating conditions, which are required to achieve compliance;
- complete description of the cabling and equipment position and orientation (this can be accomplished using photographs of the arrangement);
- performance level defined by the manufacturer, requester or purchaser;
- performance criterion specified in the generic, product or product-family standard;
- any effects on the EUT observed during or after the application of the test disturbance, and the duration for which these effects persist;
- a clear statement as to whether the EUT is judged to pass or fail, and rationale for the pass or fail decision (based on the performance criterion specified in the generic, product or product-family standard, or agreed between the manufacturer and the purchaser);
- identification of the test equipment, for example, brand name, product type, serial number;
- any special environmental conditions under which the test was performed.

Annex B
(normative)

Radiated emission measurements

B.1 General

This annex provides details for radiated emission measurement methods in a FAR.

B.2 Test equipment

The equipment used for the test is a FAR test system as used for a FAR validation done using the procedure of Clause 5, except that power amplifiers are not required for emission measurements. The measurement receiver used for emission measurements shall comply with CISPR 16-1-1.

The following equipment is required for emission measurement:

- a spectrum analyzer or receiver conforming to CISPR 16-1-1;
- a broadband antenna, cabling and FAR, as utilized during the determination of the average system transducer factor, $\overline{C}_{\mathrm{dB}}$.

The measurement result (field strength) is calculated as:

$$E_{\mathrm{dB(\mu V/m)}} = V_{p\mathrm{TR,dB(\mu V)}} + \overline{C}_{\mathrm{dB}} + 20\log\left(\frac{d_{\mathrm{measurement}}}{d_{\mathrm{reference}}}\right) \tag{B.1}$$

where

$V_{p\mathrm{TR,dB(\mu V)}}$ is the voltage at the transducer reference point, p_{TR} (see Figures 1, 2, 3 and 4) in dB(µV);

$d_{\mathrm{measurement}}$ is the distance between reference point of the antenna to the nearest face of the EUT (see Figure B.1);

$d_{\mathrm{reference}}$ is the measurement distance as specified in the product standard.

Note that the average system transducer factor includes cable loss, antenna factor, and the average site influence as determined during the validation/calibration process, but does not include loss/gain of any equipment not used during the common emissions/immunity validation/calibration procedure. Thus, it may be necessary to further correct the reading for additional associated cabling or switches, including a broadband preamplifier where used for emissions tests, if these components were not included during the determination of $\overline{C}_{\mathrm{dB}}$.

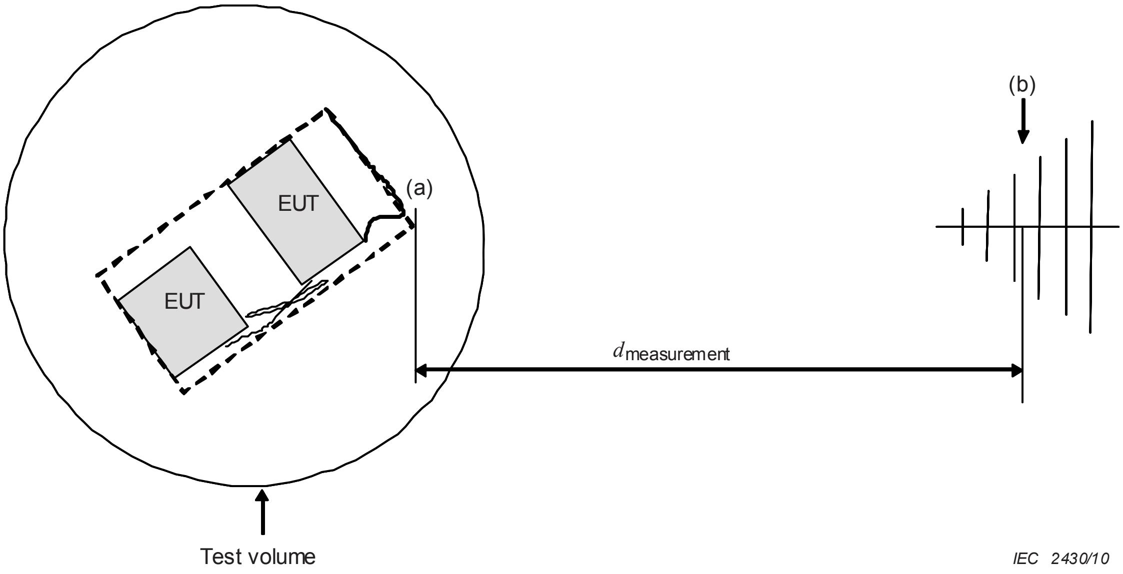

Key

(a)	EUT periphery nearest point, including cables
(b)	Broadband antenna reference point

Figure B.1 – Definition of $d_{\text{measurement}}$ for emission measurements

B.3 Test procedure

B.3.1 Preliminary measurement procedure

Preliminary testing shall be used to determine the frequencies of interest for which the final test procedures of B.3.2 will apply. Preliminary testing shall also be used to investigate various modes of operation and available EUT configurations to determine the one that will produce the maximum emissions and therefore will be used for final measurements.

NOTE Because the actual preliminary procedure required may depend on the EUT characteristics, the following recommendations a) through e) are informative and intended to provide guidance for a preliminary measurement procedure. Guidelines for a preliminary measurement procedure to identify the frequencies and worst-case modes of operation for radiated emissions are as follows:

a) Use scan or sweep mode over the complete frequency range of the antenna using peak detection and Max Hold mode.

b) Determine the proper sweep or scan time to ensure adequate signal interception.

c) If necessary, during preliminary tests, reduce the resolution bandwidth in sweep mode to reduce the displayed noise level of the spectrum analyzer or receiver. Note that this may reduce the amplitude of broadband emissions, so additional investigations to determine whether the emissions are broadband or narrowband may be necessary.

d) Rotate the EUT continuously or in stepped increments, and then repeat for the other polarization. The EUT should be investigated throughout 360° in azimuth.

e) To further evaluate the emission frequencies identified, use a smaller frequency span and investigate around frequencies near the limit using additional smaller turntable increments.

The preliminary measurement procedure selected provides a basis for the frequency selection and determination of worst-case EUT modes. This procedure typically requires setting a threshold below the applicable specification limit, based on the applied preliminary measurement procedure and performing final measurements on all frequencies that are at or above this threshold. For example, if the preliminary procedure typically provides results within 10 dB of the final measurement procedure, then all frequencies within 10 dB of the limit shall be investigated using the final measurement procedure

B.3.2 Final measurement procedure

In the final measurement procedure, the measuring receiver is tuned to the frequencies determined by the preliminary measurements. The final measurement takes place at the azimuth angle with the highest measurement receiver indication.

NOTE If the signals to be measured are broadband in nature, drifting, or do not have sufficient frequency stability, additional measures may have to be taken to ensure the proper capturing of the maximum amplitudes of emissions. Re-tuning of the test instrument may be required for the final measurement.

B.4 Test report

The test report shall detail the following for the radiated emission measurement:

a) EUT configurations and modes of operation that were investigated during the preliminary procedure;
b) preliminary measurement procedure;
c) threshold and procedures used for selection of frequencies to perform final measurements;
d) final measurement procedure;
e) report of final measurements to include:
    1) the frequency and amplitude of each emission reported;
    2) the detector used;
    3) the applicable limit by frequency and detector type;
    4) the azimuth of the turntable for each emission;
    5) the measurement distance;
    6) the antenna polarization;
f) maximum measured emissions in dB(μV/m).

Annex C
(informative)

Background on the system transducer factor and simultaneous emissions/immunity validation method

C.1 Relationship between radiated emissions and immunity facility validation methods

To illustrate the direct relationship between traditional normalized site attenuation (NSA) validation of emissions test facilities and the "uniform plane" calibration method of [2] one may begin with the equation for NSA, A_N, based on [5]:

$$A_\mathrm{N} = \frac{V_\mathrm{direct}}{V_\mathrm{site}} \times \frac{1}{F_\mathrm{Antenna,1}} \times \frac{1}{F_\mathrm{Antenna,2}} \tag{C.1}$$

where

A_N	is the NSA;
V_direct	is the voltage that appears on a spectrum analyzer or receiver with the feed cables connected together;
V_site	is the voltage that appears when transmitting antenna to antenna;
$F_\mathrm{Antenna,1}$ and $F_\mathrm{Antenna,2}$	are the antenna factors used for the NSA measurement, which must be previously determined.

Through the relationship of power and voltage, V_direct can be rewritten as follows, assuming a matched source, line impedance and load impedance:

$$V_\mathrm{direct} = \sqrt{P_\mathrm{F} R_\mathrm{L}} \tag{C.2}$$

where

P_F	is the forward power presented to the calibration point;
R_L	is the load impedance of the receiver or spectrum analyzer, usually 50 Ω.

By definition of antenna factor, V_site can also be rewritten as:

$$V_\mathrm{site} = \frac{E}{F_\mathrm{Antenna,2}} \tag{C.3}$$

where

E	is the electric field (in V/m) presented to antenna number 2 (the receive antenna);
$F_\mathrm{Antenna,2}$	is the free space antenna factor of the receive antenna.

Substituting Equations (C.2) and (C.3) into Equation (C.1), the following expression is obtained:

$$A_N = \frac{\sqrt{P_F R_L}}{E/F_{\text{Antenna,2}}} \times \frac{1}{F_{\text{Antenna,1}}} \times \frac{1}{F_{\text{Antenna,2}}} \quad \text{(C.4)}$$

from which it is observed that $F_{\text{Antenna,2}}$ may be cancelled, and therefore two antennas with previously determined antenna factors are not required to measure NSA if forward power and E-field can be observed. It is noted at this point that this is a basis for the method used in the IEC 61000-4-3 [1] uniform plane calibration; i.e. which uses a single antenna for transmitting, a measurement of electric field generated in the area to be occupied by the EUT, and measurement of the forward power required to generate this field. If desired, Equation (C.4) can be employed directly to obtain NSA, if a single previously known antenna factor ($F_{\text{Antenna,1}}$) is provided in addition to the E-field and forward power measurement data.

C.2 Determination of system gain and transducer factor, C_{dB}

The proposed method of simultaneous validation/calibration contained in IEC 61000-4-22 illustrates that the requirement for any previously determined antenna factors can be eliminated if the antenna, test facility, and feed cables are considered together as a free-space measurement system, and referenced to the results that would be obtained for an ideal free-space environment.

As a basis for the proposed harmonization of site validation methods, the ideal far-field free-space characteristics of an isotropic source are taken as the baseline reference. Note that this is very similar to the ideal, short dipole radiation pattern used for the development of NSA. In this case the general relationship between electric field, E (in V/m), and power density, P_D (in W/m^2), is as follows:

$$E^2 = P_D Z_0 \quad \text{(C.5)}$$

where Z_0 is the free space impedance of approximately 120π Ω.

The power density from a spherical, isotropic source is related to the transmit forward power, P_F (in W), of the source as:

$$P_D = \frac{P_F}{4\pi d^2} \quad \text{(C.6)}$$

where d is the distance in m from the source.

The power density of a source, with gain over isotropic, by definition of gain is then as follows:

$$P_D = \frac{P_F}{4\pi d^2} \times G \quad \text{(C.7)}$$

where G is the numeric power gain.

Substituting Equation (C.7) for P_D into Equation (C.5) and converting to decibels, one can define a system gain G (in dBi) for the free-space measurement system referenced to the feed point where the forward power, P_F, was monitored during the validation/calibration:

$$G_{\text{dBi}} = 10\log\left(\frac{E^2 d^2}{30 P_F}\right) \quad \text{(C.8)}$$

The corresponding system transducer factor, C_{dB}, utilized in IEC 61000-4-22, can be computed from the system gain as follows (in decibel form):

$$C_{\mathrm{dB}} = 20\log(f_{\mathrm{MHz}}) - 29{,}77 - G_{\mathrm{dBi}} \tag{C.9}$$

It is noted that the above system transducer factor, C_{dB}, is equivalent in usage to the antenna factor provided in Equation (C.3), and may be used to convert a voltage on a receiver or spectrum analyzer to the electric field, E. As such the system transducer factor, C_{dB}, may be considered a new type of "antenna factor" that is inclusive of the additional FAR measurement system components (such as feed cabling), as established by the IEC 61000-4-22 procedure.

Traditionally the term "antenna factor" has been used for a quantity relative to a reference point directly on the antenna, Therefore, the JTF elected to use the notation C_{dB} for the conversion of gain over isotropic (G_{dBi}) to a system transducer factor [Equation (C.9)] in order to avoid confusion with manufacturer-provided antenna factors which do not include the additional FAR system components.

References [5], [6] and [7] provide additional background for derivation of the commonly used Equation (C.9) for antenna factor from Equation (C.8) for gain.

C.3 Statistical considerations

Equations (C.8) and (C.9) provide the system gain and transducer factor at a single location. Because the actual gain and transducer factor may vary over the test volume, IEC 61000-4-22 employs the average value, as determined using the validation/calibration procedure.

The process to measure multiple positions in the test volume should ideally produce the same result for system gain and transducer factor at each position after correction for distance changes. Because the result for a real measurement system varies in the test volume, the standard deviation is closely related to the overall test system quality. Therefore, the acceptance criteria in IEC 61000-4-22 are based on the standard deviation, $s_{\mathrm{dB},C}$ ([see 5.4, Equation (4)). However, the uncertainty contribution due to use of the average system transducer factor depends on the standard deviation of the average value $s_{\mathrm{dB},\overline{C}}$ (see 5.4, Equation (5)). Therefore, the suggested contribution to overall uncertainty used for the examples in Annex D is based on $s_{\mathrm{dB},\overline{C}}$.

Annex D
(informative)

Measurement uncertainties

D.1 Measurement uncertainties for emission measurements

D.1.1 Influence factors

Figure D.1 shows the example influence factors to be taken into account for estimation of the uncertainty of field strength measurement.

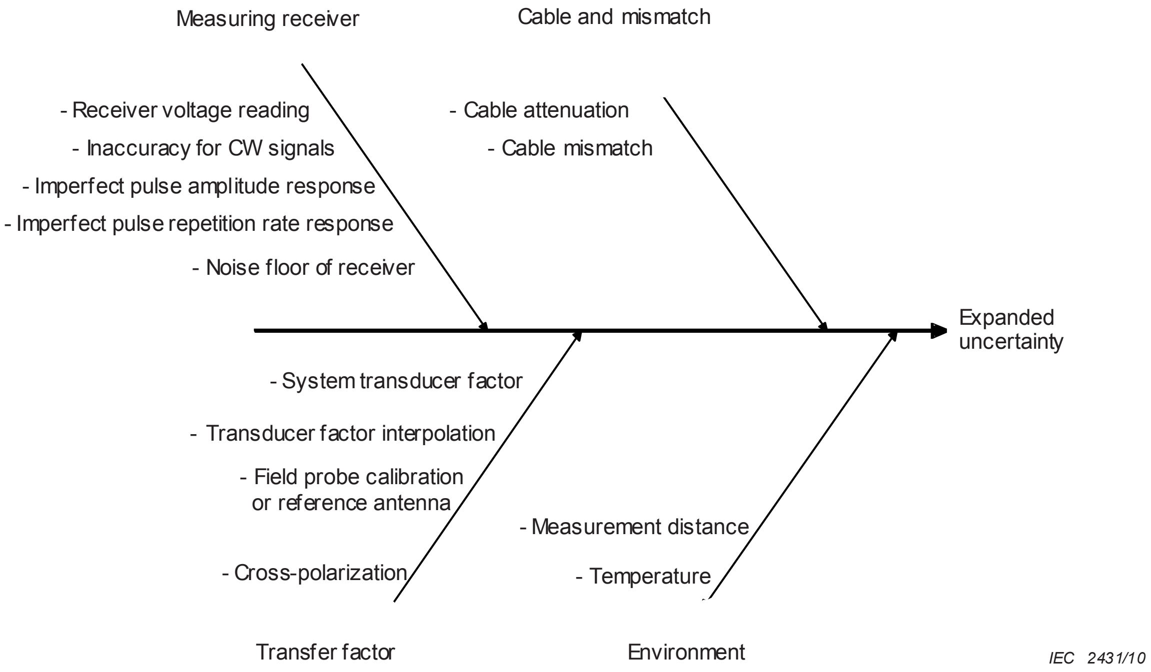

Figure D.1 – Example of influence factors for emission measurements

Measurement uncertainty and the uncertainty budgets described in this subclause are examples only. A test laboratory shall use its own numeric values for the influence factors indicated in this subclause, as well as other factors if applicable. For additional explanation of common terminology and concepts used in uncertainty calculations, see e.g. [4].

D.1.2 Estimation of the uncertainty for emission measurements

For measurements in a FAR, the instrumentation measurement uncertainty should be estimated as shown in the example Tables D.1 and D.2; descriptions about parameters used in these tables are given in D.1.3. Description of the validation set-up types is given in 5.2.

Table D.1 – Measurement instrumentation uncertainty in a FAR for radiated emission measurements in the frequency range 30 MHz to 1 000 MHz

Input quantity	x_i	Uncertainty of x_i		$u(x_i)$ dB	c_i	$[u(x_i)]^2$ Validation set-up type			
		dB	Probability distribution function			1	2	3	4
Receiver									
Receiver reading (1)	V_r	0,10	k = 1	0,10	1	0,01	0,01	0,01	0,01
Sine wave voltage (2)	δV_{sw}	1,00	k = 2	0,50	1	0,25	0,25	0,25	0,25
Pulse amplitude response (3)	δV_{pa}	1,50	Rectangular	0,87	1	0,75	0,75	0,75	0,75
Pulse repetition response (4)	δV_{pr}	1,50	Rectangular	0,87	1	0,75	0,75	0,75	0,75
Noise floor proximity (5)	δV_{nf}	0,50	k = 2	0,25	1	0,06	0,06	0,06	0,06
Cable									
Cable attenuation (6)	L_c	0,30	k = 2	0,15	1	0,02	0,02	0,02	0,02
Mismatch TRP - receiver (7)	δM	0,9 / -1	U-shaped	0,67	1	0,45	0,45	0,45	0,45
System transducer factor									
Average system transducer (8)	C_{dB}	0,46	k = 1	0,46	1	0,22	0,22	0,22	0,22
Field probe calibration (9)	δF_{FP}	1,70	k = 2	0,85	1	0,72			
Reference antenna (10)	δF_{RA}	1,00	k = 2	0,50	1		0,25	0,25	0,25
Cable attenuation (reference antenna to receiver) (11)	δA_{C2}	0,30	k = 2	0,15	1		0,02	0,02	0,02
Mismatch reference antenna to receiver / NA (12)	δM_{C2}	0,9 / -1	U-shaped	0,67	1		0,45	0,45	0,45
Receiver connected to reference antenna (13)	δV_{ind}	1,00	Rectangular	0,58	1		0,33		
Frequency interpolation (14)	δC_f	0,30	Rectangular	0,17	1	0,03	0,03	0,03	0,03
Directional coupler, coupling factor (15)	δF_{DC}	0,80	k = 2	0,40	1	0,16	0,16		0,16
Directional coupler, insertion loss (16)	δA_{DC}	0,60	k = 2	0,30	1	0,09	0,09		0,09
Cable attenuation, directional coupler to power meter (17)	δA_{C1}	0,30	k = 2	0,15	1	0,02	0,02		0,02
Mismatch directional coupler to power meter (18)	δM_{C1}	0,9 / -1	U-shaped	0,67	1	0,45	0,45		0,45
Spectrum analyzer / power meter (19)	δP_{ind}	0,80	Rectangular	0,46	1	0,21	0,21		
Network analyzer (20)	δs_{21}	0,30	k = 2	0,15	1			0,02	0,02
Cross-polarization (21)	δA_{cp}	0,00		0,00	1	0,00	0,00	0,00	0,00
Environment									
Separation distance to antenna (22)	δd_{meas}	0,30	Rectangular	0,17	1	0,03	0,03	0,03	0,03
NOTE The numbers in parentheses in the first column refer to the numbered comments in D.1.3.					u_c	2,06	2,14	1,82	2,01
				k =1,64		3,37	3,50	2,99	3,30
				k = 2		4,11	4,27	3,64	4,02

Table D.2 – Measurement instrumentation uncertainty in a FAR for radiated emission measurements in the frequency range 1 GHz to 18 GHz

Input quantity	x_i	Uncertainty of x_i		$u(x_\mathrm{i})$ dB	c_i	$[u(x_\mathrm{i})]^2$ Validation set-up type			
		dB	Probability distribution function			1	2	3	4
Receiver									
Receiver reading (1)	V_r	0,10	k = 1	0,10	1	0,01	0,01	0,01	0,01
Sine wave voltage (2)	δV_sw	1,50	k = 2	0,75	1	0,56	0,56	0,56	0,56
Noise floor proximity (5)	δV_nf	0,70	k = 2	0,35	1	0,12	0,12	0,12	0,12
Cable									
Cable attenuation (6)	$\delta L_\mathrm{c,im}$	0,30	k=2	0,15	1	0,02	0,02	0,02	0,02
Mismatch TRP - receiver (7)	δM	1,3 / -1,5	U-shaped	0,99	1	0,98	0,98	0,98	0,98
System transducer factor									
Average system transducer (8)	C_dB	0,77	k=1	0,77	1	0,60	0,60	0,60	0,60
Field probe calibration (9)	δF_FP	1,70	k=2	0,85	1	0,72			
Reference antenna (10)	δF_RA	1,00	k=2	0,50	1		0,25	0,25	0,25
Cable attenuation (reference antenna to receiver) (11)	δA_C2	0,30	k=2	0,15	1		0,02	0,02	0,02
Mismatch reference antenna to receiver / network analyzer (12)	δM_C2	1,3 / -1,5	U-shaped	0,99	1		0,98	0,98	0,98
Receiver connected to reference antenna (13)	δV_ind	1,00	Rectangular	0,58	1		0,33		
Frequency interpolation (14)	δC_f	0,30	Rectangular	0,17	1	0,03	0,03	0,03	0,03
Directional coupler, coupling factor (15)	δF_DC	0,80	k=2	0,40	1	0,16	0,16		0,16
Directional coupler, insertion loss (16)	δA_DC	0,60	k=2	0,30	1	0,09	0,09		0,09
Cable attenuation directional coupler to power meter (17)	δA_C1	0,30	k=2	0,15	1	0,02	0,02		0,02
Mismatch directional coupler to power meter (18)	δM_C1	1,3 / -1,5	U-shaped	0,99	1	0,98	0,98		0,98
Spectrum analyzer / power meter (19)	δP_ind	0,80	Rectangular	0,46	1	0,21	0,21		
Network analyzer (20)	δs_{21}	0,50	k=2	0,25	1			0,06	0,06
Cross-polarization (21)	δA_cp	0,00		0,00	1	0,00	0,00	0,00	0,00
Environment									
Separation distance to the antenna (22)	$\delta d_\mathrm{meas,}$	0,30	Rectangular	0,17	1	0,03	0,03	0,03	0,03
NOTE The numbers in parentheses in the first column refer to the numbered comments in D.1.3.					u_c	2,13	2,33	1,92	2,22
				k=1,64		3,50	3,81	3,14	3,64
				k=2		4,26	4,65	3,83	4,44

D.1.3 Comments about influence factors

The uncertainty associated with an estimate x_i of an input quantity in the above tables is the largest uncertainty considered likely within the frequency range covered by the table, provided that it is consistent with the measuring apparatus specification tolerances in CISPR 16-1-1. The numbers in parentheses in the first column of Tables D.1 and D.2 refer to the numbered comments below.

The assumptions that led to the values in the Tables D.1 and D.2 may not be appropriate for a particular test laboratory. When a test laboratory evaluates its own expanded measurement instrumentation uncertainty, U_{lab}, it shall consider the information available about its particular measuring system, including equipment characteristics, the quality and currency of calibration data, the known or likely probability distributions, and its specific measurement procedures. A test-laboratory may find it advantageous to evaluate its uncertainties over subdivisions of the frequency range, particularly if a dominant uncertainty varies significantly over that range.

The expanded uncertainties given at the bottom of Tables D.1 and D.2 are evaluated with the coverage factor k = 2, which is usually selected to indicate that the true value lies in a symmetric interval around the measurement value with a confidence level of 95 %. In case of compliance statements with the same confidence level of 95 %, a single-sided evaluation may apply leading to a coverage factor k = 1,64.

A NOTE following a comment is intended to provide some guidance to test laboratories confronted with data or situations that differ from those assumed here.

1) Receiver readings will vary for reasons that include measuring system instability, receiver noise, and meter scale interpolation errors. The estimate of V_{r} is the mean of many readings, with a standard uncertainty given by the experimental standard deviation of the mean.
2) An estimate of the correction δV_{sw} for receiver sine-wave voltage accuracy was assumed to be available from a calibration report, along with an expanded uncertainty and a coverage factor.

   NOTE 1 If a calibration report states only that the receiver sine-wave voltage accuracy is within the CISPR 16-1-1 tolerance (± 2 dB), then the estimate of the correction δV_{sw} should be taken as zero with a rectangular probability distribution having a half-width of 2 dB.

3) In general it is impractical to correct for imperfect receiver pulse response characteristics. A calibration report stating that the receiver pulse amplitude response complies with the CISPR 16-1-1 tolerance of ± 1,5 dB for peak, quasi-peak, average, or rms. detection was assumed to be available. The correction δV_{pa} was estimated to be zero with a rectangular probability distribution having a half-width of 1,5 dB.
4) The CISPR 16-1-1 tolerance for pulse repetition rate response varies with repetition rate and detector type. A verification report stating that the receiver pulse repetition rate responses comply with the CISPR 16-1-1 tolerances was assumed to be available. The correction δV_{pr} was estimated to be zero with a rectangular probability distribution having a half-width of 1,5 dB, i.e. a value considered to be representative of the various CISPR 16-1-1 tolerances.

   NOTE 2 If the pulse amplitude response or the pulse repetition rate response is verified to be within $\pm\alpha$ dB of the CISPR specification ($\alpha \leq 1{,}5$), the correction for that response may be estimated to be zero with a rectangular probability distribution having a half-width of α dB.

   If a disturbance produces a continuous wave signal at the detector, pulse response corrections need not be considered.

5) The noise floor of a CISPR receiver is not negligible for radiated disturbances, thus the proximity of the receiver noise floor may influence measurement results near the radiated disturbance limit.

   NOTE 3 For radiated disturbance measurement, the correction δV_{nf} was estimated to be zero with an expanded uncertainty of 0,5 dB and a coverage factor of 2.

6) The attenuation between p_{TR} and the input of the measurement receiver needs to be measured. The corresponding measurement error will directly influence the result of emission measurements.

7) In general, the receiver port of the p_{TR} will be connected to port 1 of a two-port network whose port 2 is terminated by a receiver of reflection coefficient Γ_{r}. The two-port network, which might be a cable, attenuator, attenuator and cable in tandem, or some other combination of components, can be represented by its S-parameters. The mismatch correction is then

$$\delta M = 20 \log\left|(1-\Gamma_{\mathrm{e}} S_{11})(1-\Gamma_{\mathrm{r}} S_{22}) - S_{21}^{2}\Gamma_{\mathrm{e}}\Gamma_{\mathrm{r}}\right| \tag{D.1}$$

where Γ_{e} is the reflection coefficient seen looking into the receiver port of the AMN or absorbing clamp with the EUT connected, or looking into the output port of the antenna when it is set up for disturbance measurement. All parameters are with respect to 50 Ω.

When only the magnitudes or extremes of magnitudes, of the parameters are known, it is not possible to calculate δM, but its extreme values $\delta M^{\pm}$ are not greater than

$$\delta M^{\pm} = 20 \log\left[1 \pm \left(|\Gamma_{\mathrm{e}}||S_{11}| + |\Gamma_{\mathrm{r}}||S_{22}| + |\Gamma_{\mathrm{e}}||\Gamma_{\mathrm{r}}||S_{11}||S_{22}| + |\Gamma_{\mathrm{e}}||\Gamma_{\mathrm{r}}||S_{21}|^{2}\right)\right] \tag{D.2}$$

The probability distribution of δM is approximately U-shaped, with width not greater than ($\delta M^{+} - \delta M^{-}$) and standard deviation not greater than the half-width divided by $\sqrt{2}$.

For radiated disturbance measurements, an antenna specification of VSWR ≤ 2,0:1 is assumed, implying $|\Gamma_{\mathrm{e}}| \leq 0{,}33$. It is also assumed that the connection to the receiver is a well-matched cable ($|S_{11}| \ll 1$, $|S_{22}| \ll 1$) of negligible attenuation ($|S_{21}| \approx 1$), and that the receiver RF attenuation was 0 dB, for which the CISPR 16-1-1 tolerance of VSWR ≤ 2,0:1 implies $|\Gamma_{\mathrm{r}}| \leq 0{,}33$.

The estimate of the correction δM was zero with a U-shaped probability distribution having width equal to the difference ($\delta M^{+} - \delta M^{-}$).

NOTE 4 The expressions for δM and $\delta M^{\pm}$ show that the mismatch error can be reduced by increasing the attenuation of the well-matched two-port network preceding the receiver. The penalty is a reduction in measurement sensitivity.

NOTE 5 Additional considerations about Equation (D.2): a) Due to non-existing or only weak correlation of the addends, the linear addition may be replaced by the root sum square rule. b) Due to the usually small magnitude of the addends, a further approximation (where $\delta M^{\pm}$ is the half width of a U-shaped distribution) is applicable, yielding finally:

$$\delta M^{\pm} \approx 8.7\sqrt{(|\Gamma_{\mathrm{e}}||S_{11}|)^{2} + (|\Gamma_{\mathrm{r}}||S_{22}|)^{2} + (|\Gamma_{\mathrm{e}}||\Gamma_{\mathrm{r}}||S_{21}|^{2})^{2}}\ \mathrm{dB}$$

For some antennas at some frequencies, the VSWR may be much greater than 2,0:1.

Precautions may be needed to ensure that the impedance seen by the receiver complies with the CISPR 16-1-1 specification of VSWR ≤ 2,0:1 when a complex antenna is used.

8) The average system transducer factor is derived from the 15 sampling points. Because the measurand refers to the average system transducer factor, its standard deviation, $s_{\mathrm{dB},\overline{C}}$, needs to be considered as contribution to uncertainty. In Tables D.1 and D.2 the allowed standard deviation of the average, taking 15 sampling points into account, is used.

9) In validation/calibration Type 1 set-up the evaluation of the average system transducer factor is made on the basis of a field probe. This contribution is a combination of calibration uncertainty, field probe unbalance (anisotropy), field probe frequency response and temperature sensitivity. Normally this data can be obtained from the probe data sheet or calibration certificate.

10) For validation/calibration Type 2 to Type 4 set-ups, the average system transducer factor is derived from measurements with a reference antenna. Its free-space antenna factor is assumed to be available from a calibration report, along with an expanded uncertainty and a coverage factor.

11) The attenuation of the cable between reference antenna and the input of the measurement receiver or network analyzer used for the validation/calibration test needs to be measured. The corresponding measurement uncertainty influences the derivation of the average system transducer factor. This contribution only applies for the Type 2 to Type 4 set-ups.

12) The connection between reference antenna and measurement receiver or network analyzer (NA) needs to be considered by a mismatch correction term M_{C2}. This contribution is associated with the mismatch correction. This contribution only applies for the Type 2 to Type 4 set-ups. For details about the principles of estimation, see also D.1.3 comment 7).

13) The receiver connected to the reference antenna during validation/calibration gives the indication V_{ind}. Its contribution to uncertainty combines the receiver reading and the sine wave response accuracy and only applies for the Type 2 set-up.

14) When a transducer factor is calculated by interpolation between frequencies at which calibration data are available, the uncertainty associated with that tranducer factor depends on the frequency interval between validation/calibration points and the variability of transducer factor with frequency. Plotting calibrated transducer factor against frequency helps visualise the situation.

The estimate of the correction δC_{f} for transducer factor interpolation error was zero with a rectangular probability distribution having a half-width of 0,3 dB.

NOTE 6 At any frequency for which a calibrated antenna factor is available, the correction δC_{f} need not be considered.

15) The coupling factor of the directional coupler between power input and forward power output is measured. This is the contribution associated with this coupling factor measurement. It applies for the Types 1, 2 and 4 set-ups.

16) The insertion loss of the directional coupler between power input and power output needs to be measured. This is the contribution associated with this measurement. It applies for the Types 1, 2 and 4 set-ups.

17) In validation/calibration Types 1, 2 and 4 set-ups a cable is used between the forward power output of the directional coupler and a spectrum analyzer/power meter/network analyzer. Its attenuation needs to be considered in the derivation of the average system transducer factor. The contribution to uncertainty associated with this measurement applies for the Types 1, 2 and 4 set-ups.

18) The connection between forward power output of the directional coupler and the spectrum analyzer/power meter/network analyzer needs to be considered by a mismatch correction term M_{C1}. This contribution is associated with the mismatch correction. This contribution only applies for the Types 1, 2 and 4 set-ups. For details on the principles of estimation see also D.1.3 comment 7).

19) The spectrum analyzer/power meter connected to the output of the directional coupler during validation/calibration gives the indication P_{ind}. Its contribution to uncertainty combines the receiver reading and the sine wave response accuracy. It only applies for the Types 1 and 2 set-ups.

20) The parameter S_{21} is measured in validation/calibration Types 3 and 4 set-ups. The uncertainty associated with this measurement influences the uncertainty of the derivation of the average system transducer factor.

21) The cross-polarization response of a biconical antenna was considered to be negligible. The estimate of the correction δA_{cp} for cross-polarization response of a log-periodic antenna was zero with a rectangular probability distribution having a half-width of 0,9 dB, corresponding to the CISPR 16-1-1 cross-polarization response tolerance of –20 dB.

NOTE 7 If a dipole is used as the measuring antenna, the correction δA_{cp} is negligible.

22) The error in separation arises from the errors in determining the perimeter of the EUT, distance measurement, and antenna mast tilt. The estimate of the correction $\delta d_{\mathrm{measurement}}$ for separation error was zero with a rectangular probability distribution having a half-width evaluated from assuming a maximum separation error of ± 0,1 m, and that field strength is inversely proportional to separation over that distance margin.

D.2 Uncertainties for immunity tests

D.2.1 General

Uncertainties for immunity tests cannot be handled in the same way as done for emission measurements, because immunity tests normally do not have a numerical result, but rather give a simple “pass” or “fail” as a test result. During an immunity test, a disturbance quantity characterised by several parameters is applied to the EUT. One or more observable signals of the EUT are monitored or observed and compared against agreed criteria, from which the test result (pass/fail) is derived.

A classical measurement uncertainty analysis in principle can be applied to the measurement of the signals from the EUT. Because the process of a monitoring measurement is EUT specific, a basic standard cannot and should not deal with measurement uncertainties for the monitoring system (the observer), however such monitoring may be achieved.

Uncertainties can also be specified for the parameters of the disturbance quantity. As such, these uncertainties pertain to the degree of agreement of the specified instrumentation with the specifications of this basic standard. These uncertainties derived for particular test instrumentation system do not describe the degree of agreement between the simulated electromagnetic phenomenon as defined in the basic standard and the real electromagnetic phenomena in the world outside the laboratory. Therefore questions regarding the definitions of the disturbance quantity are not relevant for the test instrumentation uncertainties.

Because the influence of the parameters of the disturbance quantity on the EUT is *a priori* unknown, and in most cases the EUT shows non-linear system behaviour, a single uncertainty number cannot be defined for the disturbance quantity as an “overall uncertainty”. Each of the parameters of the disturbance quantity should be accompanied with a specific uncertainty, which may lead to more than one uncertainty budget for an immunity test.

This annex focuses on the uncertainties for level setting as one example only. For standards purposes, other parameters of the disturbance quantity may be considered at later stages (e.g. field homogeneity, modulation, harmonics due to amplifier saturation).

D.2.2 Influence factors

Figure D.2 gives examples of influences upon the test method. It should be noted that the diagram is not exhaustive.

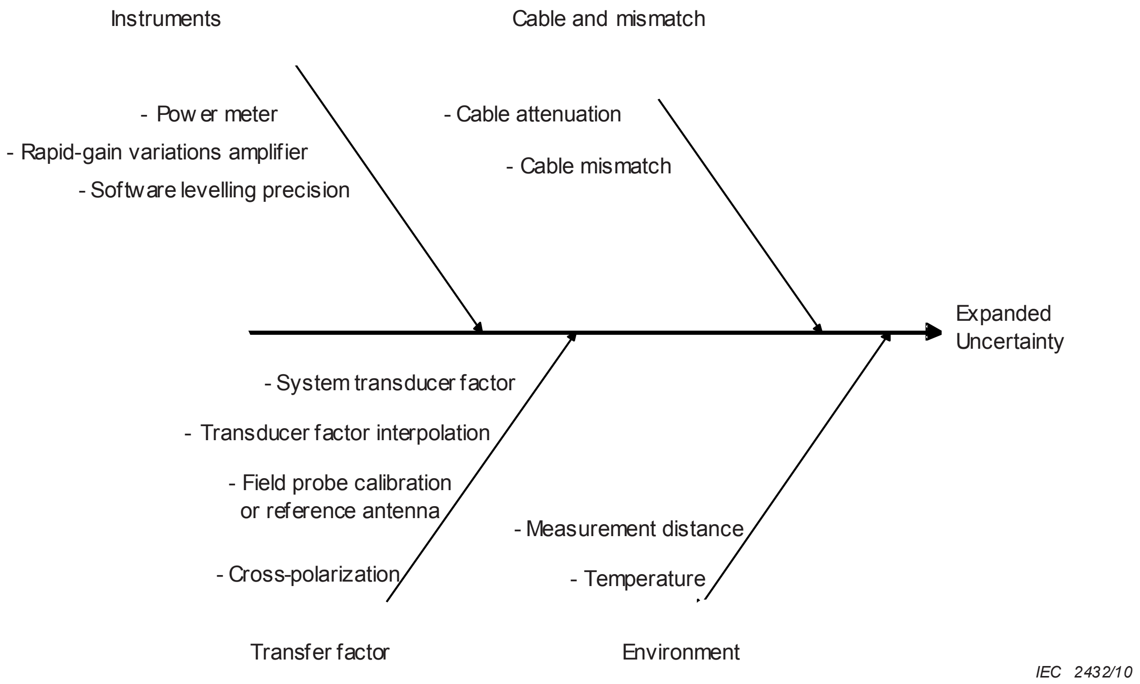

Figure D.2 – Example of influences upon the immunity test method

Measurement uncertainty and the uncertainty budgets described in this subclause are examples only. A test laboratory shall use its own numeric values for the influence factors indicated in this subclause, as well as other factors if applicable. For additional explanation of common terminology and concepts used in uncertainty calculations, see e.g. [4].

D.2.3 Estimation of the level setting uncertainty for immunity testing

The uncertainty budgets given below strongly depend on the validation/calibration set-up type (see 5.2) and the selection of cabling and instruments. For example, if a lab performs the validation/calibration with a Type 1 set-up and uses the same cabling/instrumentation for immunity testing, many contributions will be not relevant and the level setting uncertainty can be minimised.

Table D.3 – Measurement instrumentation uncertainty in a FAR for level setting for immunity testing in the frequency range 30 MHz to 1 000 MHz

Input quantity	x_i	Uncertainty of x_i		$u(x_i)$ dB	c_i	$[u(x_i)]^2$ Validation set-up type			
		dB	Probability distribution function			1	2	3	4
Instruments									
Power meter (1)	$\delta P_{\mathrm{ind,t}}$	0,80	Rectangular	0,46	1	0,21	0,21	0,21	0,21
Power amplifier gain variations (2)	δg_{PA}	0,20	Rectangular	0,12	1	0,01	0,01	0,01	0,01
Software levelling window (3)	δg_{SW}	0,60	Rectangular	0,35	1	0,12	0,12	0,12	0,12
Cabling and directional coupler									
Directional coupler, coupling factor (4)	$\delta k_{\mathrm{CLfor,t}}$	0,80	k=2	0,40	1			0,16	
Directional coupler, insertion loss (5)	$\delta k_{\mathrm{ILDC,t}}$	0,60	k=2	0,30	1			0,09	
Cable attenuation directional coupler to power meter (6)	δk_{ILC1}	0,30	k=2	0,15	1			0,02	
Mismatch directional coupler to power meter (7)	δM_{C1}	1,3 / -1,5	U-shaped	0,99	1			0,98	
Mismatch directional coupler to TRP (8)	δM_{TRP}	1,3 / -1,5	U-shaped	0,99	1			0,98	
System transducer factor									
Average system transducer (9)	C_{dB}	0,77	k=1	0,77	1	0,60	0,60	0,60	0,60
Field probe calibration (10)	δF_{FP}	1,70	k=2	0,85	1	0,72			
Reference antenna (11)	δF_{RA}	1,00	k=2	0,50	1		0,25	0,25	0,25
Cable attenuation (reference antenna to receiver) (12)	δA_{C2}	0,30	k=2	0,15	1		0,02	0,02	0,02
Mismatch reference antenna to receiver / network analyzer (13)	δM_{C2}	1,3 / -1,5	U-shaped	0,99	1		0,98	0,98	0,98
Receiver connected to reference antenna (14)	δV_{ind}	1,00	Rectangular	0,58	1		0,33		
Frequency interpolation (15)	δC_{f}	0,30	Rectangular	0,17	1	0,03	0,03	0,03	0,03
directional coupler, coupling factor (16)	δF_{DC}	0,80	k=2	0,40	1				
Directional coupler, insertion loss (17)	δA_{DC}	0,60	k=2	0,30	1				
Cable attenuation directional coupler to power meter (18)	δA_{C1}	0,30	k=2	0,15	1				0,02
Mismatch directional coupler to power meter (19)	δM_{C1}	1,3 / -1,5	U-shaped	0,99	1		0,98		0,98
Spectrum analyzer / power meter (20)	δP_{ind}	0,80	Rectangular	0,46	1	0,21	0,21		
Network analyzer (21)	δs_{21}	0,50	k=2	0,25	1			0,06	0,06
Cross-polarization (22)	δA_{cp}	0,00		0,00	1	0,00	0,00	0,00	0,00
Environment									
Separation distance to the antenna (23)	$\delta d_{\mathrm{meas,}}$	0,30	Rectangular	0,17	1	0,03	0,03	0,03	0,03
NOTE The numbers in parentheses in the first column refer to the numbered comments in D.2.4.					u_c	1,39	1,95	2,13	1,82
				k=1,64		2,29	3,19	3,50	2,99
				k=2		2,79	3,89	4,27	3,65

Table D.4 – Measurement instrumentation uncertainty in a FAR for level setting for immunity testing in the frequency range 1 GHz to 18 GHz

Input quantity	x_i	Uncertainty of x_i		$u(x_i)$ dB	c_i	$[u(x_i)]^2$ Validation set-up type			
		dB	Probability distribution function			1	2	3	4
Instruments									
Power meter (1)	$\delta P_{\mathrm{ind,t}}$	0,80	Rectangular	0,46	1	0,21	0,21	0,21	0,21
Power amplifier gain variations (2)	δg_{PA}	0,20	Rectangular	0,12	1	0,01	0,01	0,01	0,01
Software levelling window (3)	δg_{SW}	0,60	Rectangular	0,35	1	0,12	0,12	0,12	0,12
Cabling and directional coupler									
Directional coupler, coupling factor (4)	$\delta k_{\mathrm{CLfor,t}}$	0,80	k=2	0,40	1			0,16	
Directional coupler, insertion loss (5)	$\delta k_{\mathrm{ILDC,t}}$	0,60	k=2	0,30	1			0,09	
Cable attenuation directional coupling to power meter (6)	δk_{ILC1}	0,30	k=2	0,15	1			0,02	
Mismatch directional coupler - power meter (7)	δM_{C1}	1,3 / -1,5	U-shaped	0,99	1			0,98	
Mismatch directional coupler - TRP (8)	δM_{TRP}	1,3 / -1,5	U-shaped	0,99	1			0,98	
System transducer factor									
Average system transducer (9)	C_{dB}	0,46	k=1	0,46	1	0,22	0,22	0,22	0,22
Field probe calibration (10)	δF_{FP}	1,70	k=2	0,85	1	0,72			
Reference antenna (11)	δF_{RA}	1,00	k=2	0,50	1		0,25	0,25	0,25
Cable attenuation (reference antenna to receiver) (12)	δA_{C2}	0,30	k=2	0,15	1		0,02	0,02	0,02
Mismatch reference antenna to receiver / network analyzer (13)	δM_{C2}	1,3 / -1,5	U-shaped	0,99	1		0,98	0,98	0,98
Receiver connected to ref antenna (14)	δV_{ind}	1,00	Rectangular	0,58	1		0,33		
Frequency interpolation (15)	δC_{f}	0,30	Rectangular	0,17	1	0,03	0,03	0,03	0,03
directional coupler, coupling factor (16)	δF_{DC}	0,80	k=2	0,40	1				
Directional coupler, insertion loss (17)	δA_{DC}	0,60	k=2	0,30	1				
Cable attenuation directional coupler to power meter (18)	δA_{C1}	0,30	k=2	0,15	1				0,02
Mismatch directional coupler to power meter (19)	δM_{C1}	1,3 / -1,5	U-shaped	0,99	1		0,98		0,98
Spectrum analyzer / power meter (20)	δP_{ind}	0,80	Rectangular	0,46	1	0,21	0,21		
Network analyzer (21)	δs_{21}	0,50	k=2	0,25	1			0,06	0,06
Cross-polarization (22)	δA_{cp}	0,00		0,00	1	0,00	0,00	0,00	0,00
Environment									
Separation distance ot the antenna (23)	$\delta d_{\mathrm{meas,}}$	0,30	Rectangular	0,17	1	0,03	0,03	0,03	0,03
NOTE The numbers in parentheses in the first column refer to the numbered comments in D.2.4.					u_{c}	1,25	1,84	2,04	1,71
				k=1,64		2,05	3,02	3,35	2,81
				k=2		2,50	3,69	4,08	3,43

D.2.4 Comments on influence factors

The uncertainty associated with an estimate x_i of an input quantity in Tables D.3 and D.4 is the largest uncertainty considered likely within the frequency range covered by the tables. The numbers in parentheses in the first column of Tables D.3 and D.4 refer to the numbered comments in this subclause.

The assumptions that lead to the values in the Tables D.3 and D.4 may not be appropriate for a particular test laboratory. When a test laboratory evaluates its own expanded measurement instrumentation uncertainty, it should consider the information available about its particular measuring system, including equipment characteristics, the quality and currency of calibration data, the known or likely probability distributions, and its specific measurement procedures. A test laboratory may find it advantageous to evaluate its uncertainties over subdivisions of the frequency range, particularly if a dominant uncertainty varies significantly over that range.

The expanded uncertainties given at the bottom of Tables D.3 and D.4 are evaluated with a coverage factor k = 2, which is usually selected to indicate that the true value lies in a symmetric interval around the measurement value with a confidence level of 95 %. In case of compliance statements with the same confidence level of 95 %, a single-sided evaluation may apply leading to a coverage factor k = 1,64.

A NOTE following a comment is intended to provide some guidance to test laboratories confronted with data or situations that differ from those assumed here.

1) This is the contribution associated with the uncertainty of the power meter itself, and its sensors used for immunity testing. The uncertainty can be taken from the manufacturer's specification and/or calibration certificate. This contribution, and contribution (20), can be reduced to the repeatability and linearity of the power meter, if a validation/calibration Type 1 set-up is used, and the same cabling / instruments are used for the test.
2) Influence caused by rapid gain variations of the power amplifier after the steady state has been reached.
3) Influence caused by the discrete steps of the RF generator and software windows for level setting during immunity testing. The software window (level setting range) can usually be adjusted by the test lab.
4) The coupling factor between power input and forward power output of the directional coupler used for immunity testing is measured. This is the contribution associated with this coupling factor measurement. If the same directional coupler is used for validation/calibration and testing, it does not contribute to uncertainties in the validation/calibration Types 1, 2 and 4 set-ups.
5) The insertion loss between power input and power output of the directional coupler used for immunity testing needs to be measured. This is the contribution associated with this measurement. If the same directional coupler is used for validation/calibration and testing, it does not contribute to uncertainties in the validation/calibration Types 1, 2 and 4 set-ups.
6) If the cable used between directional coupler and power meter is different between validation/calibration measurement and immunity tests, it needs to be characterised. This is the contribution associated with the cable used during immunity tests. It typically contributes in validation/calibration Type 3 set-up.
7) The forward power output of the directional coupler is connected to port 1 of a two-port network whose port 2 is terminated by the power meter of reflection coefficient Γ_r. The two-port network, which might be a cable, attenuator, attenuator and cable in tandem, or some other combination of components, can be represented by its S-parameters. The mismatch correction is then

$$\delta M = 20\log\left[(1-\Gamma_\mathrm{e}S_{11})(1-\Gamma_\mathrm{r}S_{22}) - S_{21}^2\Gamma_\mathrm{e}\Gamma_\mathrm{r}\right] \qquad \text{(D.3)}$$

where Γ_e is the reflection coefficient seen looking into the output port of the directional coupler. All parameters are with respect to 50 Ω.

When only the magnitudes or extremes of magnitudes, of the parameters are known, it is not possible to calculate δM, but its extreme values $\delta M^{\pm}$ are not greater than

$$\delta M^{\pm} = 20 \log\left[1 \pm \left(|\Gamma_{\mathrm{e}}||S_{11}| + |\Gamma_{\mathrm{r}}||S_{22}| + |\Gamma_{\mathrm{e}}||\Gamma_{\mathrm{r}}||S_{11}||S_{22}| + |\Gamma_{\mathrm{e}}||\Gamma_{\mathrm{r}}||S_{21}|^2 \right) \right] \tag{D.4}$$

The probability distribution of δM is approximately U-shaped, with width not greater than ($\delta M^{+} - \delta M^{-}$) and standard deviation not greater than the half-width divided by $\sqrt{2}$.

The estimate of the correction δM was zero with a U-shaped probability distribution having width equal to the difference ($\delta M^{+} - \delta M^{-}$).

NOTE 1 The expressions for δM and $\delta M^{\pm}$ show that mismatch error can be reduced by increasing the attenuation of the well-matched two-port network preceding the receiver. The penalty is a reduction in measurement sensitivity.

NOTE 2 Additional considerations about Equation (D.4): a) due to non-existing or only weak correlation of the addends, the linear addition may be replaced by the root sum square rule; and b) due to the usually small magnitude of the addends, a further approximation (where $\delta M^{\pm}$ is the half width of a U-shaped distribution) is applicable, yielding finally:

$$\delta M^{\pm} \approx 8.7\sqrt{(|\Gamma_{\mathrm{e}}||S_{11}|)^2 + (|\Gamma_{\mathrm{r}}||S_{22}|)^2 + (|\Gamma_{\mathrm{e}}||\Gamma_{\mathrm{r}}||S_{21}|^2)^2}\ \text{dB}$$

This contribution is typically relevant in validation/calibration Type 3 set-up only.

8) For immunity tests, the output of the directional coupler is connected to P_{TR}. The correction for mismatch yields to an uncertainty contribution that is typically relevant for validation/calibration Type 3 set-up only.

9) The average system transducer factor is derived from the 15 sampling points. Because the measurand refers to the average system transducer factor, its standard deviation, $s_{\mathrm{dB},\overline{C}}$, needs to be considered as contribution to uncertainty. In the Tables D.3 and D.4, the allowed standard deviation of the average taking 15 sampling points into account is used.

10) In validation/calibration Type 1 set-up, the evaluation of the average system transducer factor is made on the basis of a field probe. This contribution is a combination of calibration uncertainty, field probe unbalance (anisotropy), field probe frequency response and temperature sensitivity. Normally this data can be obtained from the probe data sheet or calibration certificate.

11) For validation/calibration Types 2 to 4 set-ups the average system transducer factor is derived from measurements with a reference antenna. Its free-space antenna factor F_{RA} is assumed to be available from a calibration report, along with an expanded uncertainty and a coverage factor.

12) The attenuation of the cable between reference antenna and the input of the measurement receiver or network analyzer used for validation/calibration needs to be measured. The corresponding measurement uncertainty influences the derivation of the average system transducer factor. This contribution only applies for the Types 2 to 4 set-ups.

13) The connection between reference antenna and measurement receiver or network analyzer needs to be considered by a mismatch correction term M_{C2}. This contribution is associated with the mismatch correction. This contribution only applies for the Types 2 to 4 set-ups. For details on the principles of estimation see also D.2.4 comment 7.

14) The receiver connected to the reference antenna during validation/calibration gives the indication V_{ind}. Its contribution to uncertainty combines the receiver reading and the sine wave response accuracy, and applies for the Type 2 set-up.

15) When a transducer factor is calculated by interpolation between frequencies at which validation/calibration data are available, the uncertainty associated with that transducer factor depends on the frequency interval between validation/calibration points and the variability of transducer factor with frequency. Plotting calibrated transducer factor against frequency helps visualise the situation.

The estimate of the correction δC_f for transducer factor interpolation error was zero with a rectangular probability distribution having a half-width of 0,3 dB.

NOTE 3 At any frequency for which a calibrated antenna factor is available, the correction δC_f need not be considered.

16) The coupling factor of the directional coupler between power input and forward power output is measured. This is the contribution associated with this coupling factor measurement. It applies only in case that different directional couplers are used for validation/calibration and immunity testing.

17) The insertion loss of the directional coupler between power input and power output needs to be measured. This is the contribution associated with this measurement. It applies only in case that different directional couplers are used for validation/calibration and immunity testing.

18) In validation/calibration Type 4 set-up a cable is used between the forward power output of the directional coupler and a network analyzer, which may differ from the cable between directional coupler and power meter during immunity testing. Its attenuation needs to be considered in the derivation of the average system transducer factor. The contribution to uncertainty associated with this measurement applies for the Type 4 set-up.

19) The connection between forward power output of the directional coupler and the network analyzer needs to be considered by a mismatch correction term M_C1. This contribution is associated with the mismatch correction. This contribution only applies for the Types 2 and 4 set-ups. For details about the principles of estimation see also D.2.4 comment 7.

20) The spectrum analyzer/power meter connected to the output of the directional coupler during validation/calibration gives the indication P_ind. Its contribution to uncertainty combines the receiver reading and the sine wave response accuracy. It only applies for the Types 1 and 2 set-ups. Together with D.2.4 comment 1), it can be reduced with regard to the repeatability and linearity of the power meter, if the same power meter is used for immunity testing.

21) The parameter S_{21} is measured in validation/calibration Types 3 and 4 set-ups. The uncertainty associated with this measurement influences the uncertainty of the derivation of the average system transducer factor.

22) The cross-polarization response of a biconical antenna is considered to be negligible. The estimate of the correction δA_cp for cross-polarization response of a log-periodic antenna was zero with a rectangular probability distribution having a half-width of 0,9 dB, corresponding to the CISPR 16-1-1 cross-polarization response tolerance of –20 dB.

NOTE 4 If a dipole is used as the measuring antenna, the correction δA_cp is negligible.

23) The error in separation arises from the errors in determining the perimeter of the EUT, distance measurement, and antenna mast tilt. The estimate of the correction $\delta d_\mathrm{measurement}$ for separation error was zero with a rectangular probability distribution having a half-width evaluated from assuming a maximum separation error of ± 0,1 m, and that field strength is inversely proportional to separation over that distance margin.

Bibliography

[1] IEC Guide 107:2009, *Electromagnetic compatibility – Guide to the drafting of electromagnetic compatibility publications*

[2] IEC 61000-4-3:2006 + A1:2007, *Electromagnetic Compatibility (EMC) – Part 4-3: Testing and measurement techniques – Radiated radio frequency, electromagnetic field immunity test*

[3] CISPR/TR 16-4-1:2009, *Specification for Radio Disturbance and Immunity Measuring Apparatus and Methods – Part 4-1: Uncertainties, Statistics and Limit Modelling – Uncertainties in Standardized EMC tests*

[4] ISO/IEC Guide 98-3, Uncertainty of measurement – Part 3: Guide to the expression of uncertainty in measurement (GUM:1995)

[5] ANSI C63.4-2009, *American National Standard for Methods of Measurement of Radio-Noise Emissions from Low-Voltage Electrical and Electronic Equipment in the Range of 9 kHz to 40 GHz*

[6] Kraus, John Daniel, *Antennas*, 2nd ed., McGraw-Hill, 1988, Section 2-25.

[7] Lee, Kai Fong, *Principles of Antenna Theory*, Wiley, 1984, Section 4-4.

This page deliberately left blank

British Standards Institution (BSI)

BSI is the national body responsible for preparing British Standards and other standards-related publications, information and services.

BSI is incorporated by Royal Charter. British Standards and other standardization products are published by BSI Standards Limited.

About us

We bring together business, industry, government, consumers, innovators and others to shape their combined experience and expertise into standards -based solutions.

The knowledge embodied in our standards has been carefully assembled in a dependable format and refined through our open consultation process. Organizations of all sizes and across all sectors choose standards to help them achieve their goals.

Information on standards

We can provide you with the knowledge that your organization needs to succeed. Find out more about British Standards by visiting our website at bsigroup.com/standards or contacting our Customer Services team or Knowledge Centre.

Buying standards

You can buy and download PDF versions of BSI publications, including British and adopted European and international standards, through our website at bsigroup.com/shop, where hard copies can also be purchased.

If you need international and foreign standards from other Standards Development Organizations, hard copies can be ordered from our Customer Services team.

Subscriptions

Our range of subscription services are designed to make using standards easier for you. For further information on our subscription products go to bsigroup.com/subscriptions.

With **British Standards Online (BSOL)** you'll have instant access to over 55,000 British and adopted European and international standards from your desktop. It's available 24/7 and is refreshed daily so you'll always be up to date.

You can keep in touch with standards developments and receive substantial discounts on the purchase price of standards, both in single copy and subscription format, by becoming a **BSI Subscribing Member**.

PLUS is an updating service exclusive to BSI Subscribing Members. You will automatically receive the latest hard copy of your standards when they're revised or replaced.

To find out more about becoming a BSI Subscribing Member and the benefits of membership, please visit bsigroup.com/shop.

With a **Multi-User Network Licence (MUNL)** you are able to host standards publications on your intranet. Licences can cover as few or as many users as you wish. With updates supplied as soon as they're available, you can be sure your documentation is current. For further information, email bsmusales@bsigroup.com.

BSI Group Headquarters

389 Chiswick High Road London W4 4AL UK

Revisions

Our British Standards and other publications are updated by amendment or revision.

We continually improve the quality of our products and services to benefit your business. If you find an inaccuracy or ambiguity within a British Standard or other BSI publication please inform the Knowledge Centre.

Copyright

Useful Contacts:

Customer Services
Tel: +44 845 086 9001
Email (orders): orders@bsigroup.com
Email (enquiries): cservices@bsigroup.com

Subscriptions
Tel: +44 845 086 9001
Email: subscriptions@bsigroup.com

Knowledge Centre
Tel: +44 20 8996 7004
Email: knowledgecentre@bsigroup.com

Copyright & Licensing
Tel: +44 20 8996 7070
Email: copyright@bsigroup.com

...making excellence a habit.™