BS EN ISO 11855-2:2015

BSI Standards Publication

Building environment design — Design, dimensioning, installation and control of embedded radiant heating and cooling systems

Part 2: Determination of the design heating and cooling capacity (ISO 11855-2:2012)

bsi.

...making excellence a habit.™

National foreword

This British Standard is the UK implementation of EN ISO 11855-2:2015. It is identical to ISO 11855-2:2012.

The UK participation in its preparation was entrusted to Technical Committee RHE/24, Central heating installations.

A list of organizations represented on this committee can be obtained on request to its secretary.

This publication does not purport to include all the necessary provisions of a contract. Users are responsible for its correct application.

ISBN 978 0 580 88071 1

ICS 91.040.01; 91.140.10; 91.140.30

Compliance with a British Standard cannot confer immunity from legal obligations.

This British Standard was published under the authority of the Standards Policy and Strategy Committee on 31 August 2015.

Amendments issued since publication

Date	Text affected

EUROPEAN STANDARD
NORME EUROPÉENNE
EUROPÄISCHE NORM

EN ISO 11855-2

August 2015

ICS 91.140.10; 91.140.30

English Version

Building environment design - Design, dimensioning, installation and control of embedded radiant heating and cooling systems - Part 2: Determination of the design heating and cooling capacity (ISO 11855-2:2012)

Conception de l'environnement des bâtiments - Conception, dimensionnement, installation et contrôle des systèmes intégrés de chauffage et de refroidissement par rayonnement - Partie 2 : Détermination de la puissance calorifique et frigorifique à la conception (ISO 11855-2:2012)

Umweltgerechte Gebäudeplanung - Planung, Auslegung, Installation und Steuerung flächenintegrierter Strahlheizungs- und -kühlsysteme - Teil 2: Bestimmung der Auslegungs-Heiz- bzw. Kühlleistung (ISO 11855-2:2012)012)

This European Standard was approved by CEN on 30 July 2015.

CEN members are bound to comply with the CEN/CENELEC Internal Regulations which stipulate the conditions for giving this European Standard the status of a national standard without any alteration. Up-to-date lists and bibliographical references concerning such national standards may be obtained on application to the CEN-CENELEC Management Centre or to any CEN member.

This European Standard exists in three official versions (English, French, German). A version in any other language made by translation under the responsibility of a CEN member into its own language and notified to the CEN-CENELEC Management Centre has the same status as the official versions.

CEN members are the national standards bodies of Austria, Belgium, Bulgaria, Croatia, Cyprus, Czech Republic, Denmark, Estonia, Finland, Former Yugoslav Republic of Macedonia, France, Germany, Greece, Hungary, Iceland, Ireland, Italy, Latvia, Lithuania, Luxembourg, Malta, Netherlands, Norway, Poland, Portugal, Romania, Slovakia, Slovenia, Spain, Sweden, Switzerland, Turkey and United Kingdom.

EUROPEAN COMMITTEE FOR STANDARDIZATION
COMITÉ EUROPÉEN DE NORMALISATION
EUROPÄISCHES KOMITEE FÜR NORMUNG

CEN-CENELEC Management Centre: Avenue Marnix 17, B-1000 Brussels

Ref. No. EN ISO 11855-2:2015 E

Contents

Foreword

ISO (the International Organization for Standardization) is a worldwide federation of national standards bodies (ISO member bodies). The work of preparing International Standards is normally carried out through ISO technical committees. Each member body interested in a subject for which a technical committee has been established has the right to be represented on that committee. International organizations, governmental and non-governmental, in liaison with ISO, also take part in the work. ISO collaborates closely with the International Electrotechnical Commission (IEC) on all matters of electrotechnical standardization.

International Standards are drafted in accordance with the rules given in the ISO/IEC Directives, Part 2.

The main task of technical committees is to prepare International Standards. Draft International Standards adopted by the technical committees are circulated to the member bodies for voting. Publication as an International Standard requires approval by at least 75 % of the member bodies casting a vote.

Attention is drawn to the possibility that some of the elements of this document may be the subject of patent rights. ISO shall not be held responsible for identifying any or all such patent rights.

ISO 11855-2 was prepared by Technical Committee ISO/TC 205, *Building environment design*.

ISO 11855 consists of the following parts, under the general title *Building environment design — Design, dimensioning, installation and control of embedded radiant heating and cooling systems*:

- *Part 1: Definition, symbols, and comfort criteria*
- *Part 2: Determination of the design and heating and cooling capacity*
- *Part 3: Design and dimensioning*
- *Part 4: Dimensioning and calculation of the dynamic heating and cooling capacity of Thermo Active Building Systems (TABS)*
- *Part 5: Installation*
- *Part 6: Control*

Part 1 specifies the comfort criteria which should be considered in designing embedded radiant heating and cooling systems, since the main objective of the radiant heating and cooling system is to satisfy thermal comfort of the occupants. Part 2 provides steady-state calculation methods for determination of the heating and cooling capacity. Part 3 specifies design and dimensioning methods of radiant heating and cooling systems to ensure the heating and cooling capacity. Part 4 provides a dimensioning and calculation method to design Thermo Active Building Systems (TABS) for energy-saving purposes, since radiant heating and cooling systems can reduce energy consumption and heat source size by using renewable energy. Part 5 addresses the installation process for the system to operate as intended. Part 6 shows a proper control method of the radiant heating and cooling systems to ensure the maximum performance which was intended in the design stage when the system is actually being operated in a building.

Introduction

The radiant heating and cooling system consists of heat emitting/absorbing, heat supply, distribution, and control systems. The ISO 11855 series deals with the embedded surface heating and cooling system that directly controls heat exchange within the space. It does not include the system equipment itself, such as heat source, distribution system and controller.

The ISO 11855 series addresses an embedded system that is integrated with the building structure. Therefore, the panel system with open air gap, which is not integrated with the building structure, is not covered by this series.

The ISO 11855 series shall be applied to systems using not only water but also other fluids or electricity as a heating or cooling medium.

The object of the ISO 11855 series is to provide criteria to effectively design embedded systems. To do this, it presents comfort criteria for the space served by embedded systems, heat output calculation, dimensioning, dynamic analysis, installation, operation, and control method of embedded systems.

Building environment design — Design, dimensioning, installation and control of embedded radiant heating and cooling systems —

Part 2: Determination of the design heating and cooling capacity

1 Scope

This part of ISO 11855 specifies procedures and conditions to enable the heat flow in water based surface heating and cooling systems to be determined relative to the medium differential temperature for systems. The determination of thermal performance of water based surface heating and cooling systems and their conformity to this part of ISO 11855 is carried out by calculation in accordance with design documents and a model. This should enable a uniform assessment and calculation of water based surface heating and cooling systems.

The surface temperature and the temperature uniformity of the heated/cooled surface, nominal heat flow density between water and space, the associated nominal medium differential temperature, and the field of characteristic curves for the relationship between heat flow density and the determining variables are given as the result.

This part of ISO 11855 includes a general method based on Finite Difference or Finite Element Methods and simplified calculation methods depending on position of pipes and type of building structure.

The ISO 11855 series is applicable to water based embedded surface heating and cooling systems in residential, commercial and industrial buildings. The methods apply to systems integrated into the wall, floor or ceiling construction without any open air gaps. It does not apply to panel systems with open air gaps which are not integrated into the building structure.

The ISO 11855 series also applies, as appropriate, to the use of fluids other than water as a heating or cooling medium. The ISO 11855 series is not applicable for testing of systems. The methods do not apply to heated or chilled ceiling panels or beams.

2 Normative references

The following referenced documents are indispensable for the application of this document. For dated references, only the edition cited applies. For undated references, the latest edition of the referenced document (including any amendments) applies.

ISO 11855-1:2012, *Building environment design — Design, dimensioning, installation and control of embedded radiant heating and cooling systems — Part 1: Definition, symbols, and comfort criteria*

EN 1264-2, *Water based surface embedded heating and cooling systems — Part 2: Floor heating: Prove methods for the determination of the thermal output using calculation and test methods*

3 Terms and definitions

For the purposes of this document, the terms and definitions given in ISO 11855-1:2012 apply.

4 Symbols and abbreviations

For the purposes of this document, the symbols and abbreviations in Table 1 apply.

Table 1 — Symbols and abbreviations

Symbol	Unit	Quantity
α_i	—	Parameter factors for calculation of characteristic curves
A_A	m^2	Surface of the occupied area
A_F	m^2	Surface of the heating/cooling surface area
A_R	m^2	Surface of the peripheral area
b_u	—	Calculation factor depending on the pipe spacing
B, B_G, B_0	W/(m^2·K)	Coefficients depending on the system
D	m	External diameter of the pipe, including sheathing where used
d_a	m	External diameter of the pipe
d_i	m	Internal diameter of the pipe
d_M	m	External diameter of sheathing
c_W	kJ/(kg·K)	Specific heat capacity of water
h_t	W/(m^2·K)	Total heat exchange coefficient (convection + radiation) between surface and space
K_H	W/(m^2·K)	Equivalent heat transmission coefficient
K_WL	—	Parameter for heat conducting devices
k_fin	—	Parameter for heat conducting devices
k_CL	—	Parameter for heat conducting layer
L_WL	m	Width of heat conducting devices
L_fin	m	Width of fin (horizontal part of heat conducting device seen as a heating fin)
L_R	m	Length of installed pipes
m	—	Exponents for determination of characteristic curves
m_H	kg/s	Design heating/cooling medium flow rate
n, n_G	—	Exponents
q	W/m^2	Heat flux at the surface
q_A	W/m^2	Heat flux in the occupied area
q_des	W/m^2	Design heat flux
q_G	W/m^2	Limit heat flux
q_N	W/m^2	Nominal heat flux
q_R	W/m^2	Heat flux in the peripheral area
q_u	W/m^2	Outward heat flux
R_o	m^2·K/W	Partial inwards heat transmission resistance of surface structure
R_u	m^2·K/W	Partial outwards heat transmission resistance of surface structure
$R_{\lambda,\mathrm{B}}$	m^2·K/W	Thermal resistance of surface covering

$R_{\lambda,\mathrm{ins}}$	m²·K/W	Thermal resistance of thermal insulation
s_h	m	In Type B systems, thickness of thermal insulation from the outward edge of the insulation to the inward edge of the pipes (see Figure 2)
s_l	m	In Type B systems, thickness of thermal insulation from the outward edge of the insulation to the outward edge of the pipes (see Figure 2)
s_ins	m	Thickness of thermal insulation
s_R	m	Pipe wall thickness
s_u	m	Thickness of the layer above the pipe
s_WL	m	Thickness of heat conducting device
S	m	Thickness of the screed (excluding the pipes in type A systems)
W	m	Pipe spacing
α	W/(m²·K)	Heat exchange coefficient
$\theta_\mathrm{s,max}$	°C	Maximum surface temperature
$\theta_\mathrm{s,min}$	°C	Minimum surface temperature
θ_i	°C	Design indoor temperature
θ_m	°C	Temperature of the heating/cooling medium
θ_R	°C	Return temperature of heating/cooling medium
θ_V	°C	Supply temperature of heating/cooling medium
θ_u	°C	Indoor temperature in an adjacent space
$\Delta\theta_\mathrm{H}$	K	Heating/cooling medium differential temperature
$\Delta\theta_\mathrm{H,des}$	K	Design heating/cooling medium differential temperature
$\Delta\theta_\mathrm{H,G}$	K	Limit of heating/cooling medium differential temperature
$\Delta\theta_\mathrm{N}$	K	Nominal heating/cooling medium differential temperature
$\Delta\theta_\mathrm{V}$	K	Heating/cooling medium differential supply temperature
$\Delta\theta_\mathrm{V,des}$	K	Design heating/cooling medium differential supply temperature
λ	W/(m·K)	Thermal conductivity
σ	K	Temperature drop $\theta_\mathrm{V} - \theta_\mathrm{R}$
φ	—	Conversion factor for temperatures
ψ	—	Content by volume of the attachment burrs in the screed

5 Concept of the method to determine the heating and cooling capacity

A given type of surface (floor, wall, ceiling) delivers, at a given average surface temperature and indoor temperature (operative temperature θ_i), the same heat flux in any space independent of the type of embedded system. It is therefore possible to establish a basic formula or characteristic curve for cooling and a basic formula or characteristic curve for heating, for each of the type of surfaces (floor, wall, ceiling), independent of the type of embedded system, which is applicable to all heating and cooling surfaces (see Clause 6).

Two methods are included in this part of ISO 11855:

- simplified calculation methods depending on the type of system (see Clause 7);
- Finite Element Method and Finite Difference Method (see Clause 8).

Different simplified calculation methods are included in Clause 7 for calculation of the surface temperature (average, maximum and minimum temperature) depending on the system construction (type of pipe, pipe diameter, pipe distance, mounting of pipe, heat conducting devices, distribution layer) and construction of the floor/wall/ceiling (covering, insulation layer, trapped air layer, etc.). The simplified calculation methods are specific for the given type of system, and the boundary conditions listed in Clause 7 shall be met. In the calculation report, it shall be clearly stated which calculation method has been applied.

In case a simplified calculation method is not available for a given type of system, either a basic calculation using two or three dimensional finite element or finite difference method can be applied (see Clause 8 and Annex D).

NOTE In addition, laboratory testing (for example EN 1264-2:2008, Clause 9) may be applied.

Based on the calculated average surface temperature at given combinations of medium (water) temperature and space temperature, it is possible to determine the steady state heating and cooling capacity (see Clause 9).

6 Heat exchange coefficient between surface and space

The relationship between the heat flux and mean differential surface temperature [see Figure 1 and Equations (1) to (4)] depends on the type of surface (floor, wall, ceiling) and whether the temperature of the surface is lower (cooling) or higher (heating) than the space temperature.

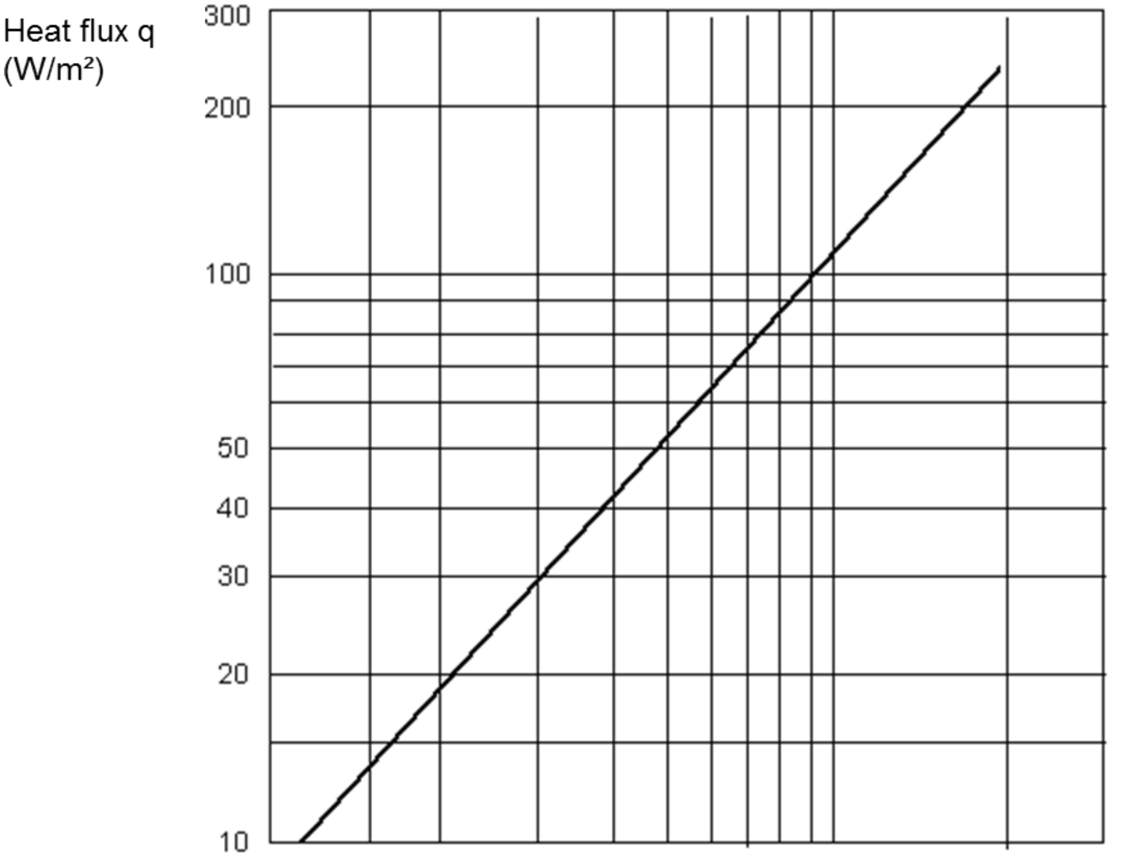

Figure 1 — Basic characteristic curve for floor heating and ceiling cooling

For floor heating and ceiling cooling in Figure 1, the heat flow density q is given by:

$$q = 8{,}92\ (\theta_{S,m} - \theta_i)^{1,1}\ (\text{W/m}^2) \tag{1}$$

where

$\theta_{S,m}$ is the average surface temperature in°C;

θ_i is the nominal indoor operative temperature in °C.

For other types of surface heating and cooling systems, the heat flux q is given by:

Wall heating and wall cooling: $q = 8\ (|\theta_{s,m} - \theta_i|)\ (\text{W/m}^2)$ (2)

Ceiling heating: $q = 6\ (|\theta_{s,m} - \theta_i|)\ (\text{W/m}^2)$ (3)

Floor cooling: $q = 7\ (|\theta_{s,m} - \theta_i|)\ (\text{W/m}^2)$ (4)

The heat transfer coefficient is combined convection and radiation.

NOTE In many building system simulations using dynamic computer models, the heat transfer is often split up in a convective part (between heated/cooled surface and space air) and a radiant part (between heated/cooled surface and the surrounding surfaces or sources). The radiant heat transfer coefficient may in the normal temperature range 15-30 °C be fixed to 5,5 W/m^{2}K. The convective heat transfer coefficient depends on type of surface, heating or cooling, air velocity (forced convection) or temperature difference between surface and air (natural convection).

For using the simplified calculation method in Annex A the characteristic curves present the heat flux as a function of the difference between the heating/cooling medium temperature and the indoor temperature. For the user of Annex A, this means not to do any calculations by directly using values of heat exchange coefficients. Consequently, Annex A does not include values for such an application or special details or equations concerning heat exchange coefficients on heating or cooling surfaces.

Thus, the values α of Table A.12 of Annex A are not intended to calculate the heat flux directly. In fact, they are provided exclusively for the conversion of characteristic curves in accordance with Equation (A.32) in Clause A.3. For simplifications these calculations are based on the same heat exchange coefficient for floor cooling and ceiling heating, 6,5 W/m^{2}K.

For every surface heating and cooling system, there is a maximum allowable heat flux, the limit heat flux q_G. This is determined for a selected design indoor room temperature of θ_i (for heating, often 20 °C and for cooling, often 26 °C) at the maximum or minimum surface temperature $\theta_{F,max}$ and a temperature drop $\sigma = 0$ K.

For the calculations, the centre of the heating or cooling surface area, regardless of the type of system, is used as a reference point for $\theta_{S,max}$.

The average surface temperature, $\theta_{S,m}$, which determines the heat flow density (refer to the basic characteristic curve) is linked with the maximum or minimum surface temperature: $\theta_{S,m} < \theta_{S,max}$ and. $\theta_{S,m} > \theta_{S,min}$ always applies.

The attainable value, $\theta_{S,m}$, depends not only on the type of system, but also on the operating conditions (temperature drop $\sigma = \theta_V - \theta_R$, outward heat flow q_u and heat resistance of the covering $R_{\lambda,B}$).

The following assumptions form the basis for calculation of the heat flux:

- heat transfer between the heated or cooled surface and the space occurs in accordance with the basic characteristic curve;

- the temperature drop $\sigma = 0$. The dependence of the characteristic curve on the temperature drop is determined by using the logarithmically determined mean differential heating medium temperature $\Delta\theta_H$ [see Equation (1)];
- turbulent flow in pipe: $\frac{m_H}{d_i} > 4000 \frac{kg}{h \cdot m}$;
- no lateral heat flow.

7 Simplified calculation methods for determining heating and cooling capacity or surface temperature

Two types of simplified calculation methods can be applied according to this part of ISO 11855:

- one method is based on a single power function product of all relevant parameters developed from the finite element method (FEM);
- another method is based on calculation of equivalent thermal resistance between the temperature of the heating or cooling medium and the surface temperature (or room temperature).

A given system construction can only be calculated with one of the simplified methods. The correct method to apply depends on the type of system, A to G (position of pipes, concrete or wooden construction) and the boundary conditions listed in Table 2.

Table 2 — Criteria for selection of simplified calculation method

Pipe position	Type of system	Figure	Boundary conditions	Reference to method
In screed Thermally decoupled from the structural base of the building by thermal insulation	A, C	2 a)	$W \geq 0{,}050$ m $s_u \geq 0{,}01$ m $0{,}008 \text{ m} \leq d \leq 0{,}03$ m $s_u/\lambda_e \geq 0{,}01$	7.1 A.2.2
In insulation, conductive devices Not wooden constructions except for weight bearing and thermal diffusion layer	B	2 b)	$0{,}05 \text{ m} \leq W \leq 0{,}45$ m $0{,}014 \text{ m} \leq d \leq 0{,}022$ m $0{,}01 \text{ m} \leq s_u/\lambda_e \leq 0{,}18$	7.1 A.2.3
Plane section system	D	2 c)		7.1, A.2.4
In concrete slab	E	4	$S_T/W \geq 0{,}3$	7.2, B.1
Capillar tubes in concrete surface	F	5	$d_a/W \leq 0{,}2$	7.2, B.2
Wooden constructions, pipes in sub floor or under sub floor, conductive devices	G	6	$\lambda_{wl} \geq 10\, \lambda_{surroundingmaterial}$ $S_{WL}\, \lambda \geq 0{,}01$	7.2, Annex C

7.1 Universal single power function

The heat flux between embedded pipes (temperature of heating or cooling medium) and the space is calculated by the general equation:

$$q = B \cdot \prod_i (a_i^{m_i}) \cdot \Delta\theta_{\mathrm{H}} \quad (\mathrm{W/m^2}) \tag{5}$$

where

B is a system-dependent coefficient in W/(m²·K). This depends on the type of system;

$\prod_i (a_i^{m_i})$ is the power product, which links the parameters of the structure (surface covering, pipe spacing, pipe diameter and pipe covering).

This calculation method is given in Annex A for the following four types of systems:

- Type A with pipes embedded in the screed or concrete (see Figure 2 and A.2.2);
- Type B with pipes embedded outside the screed (see Figure 2 and A.2.3);
- Type C with pipes embedded in the screed (see Figure 2 and A.2.2);
- Type D plane section systems (see A.2.4).

Figure 2 shows the types as embedded in the floor, but the methods can also be applied for wall and ceiling systems with a corresponding position of the pipes.

This method shall only be used for system configurations meeting the boundary conditions listed for the different types of systems in Annex A.

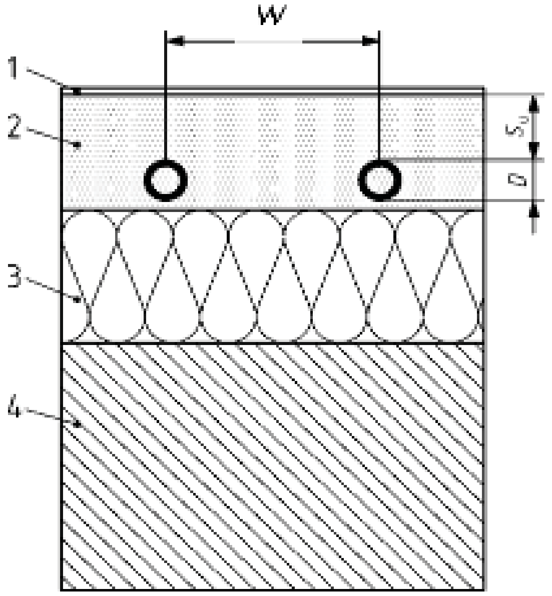

a) Type A and C

Key

1 floor covering
2 weight bearing and thermal diffusion layer (cement screed, anhydrite screed, asphalt screed)
3 thermal insulation
4 structural bearing

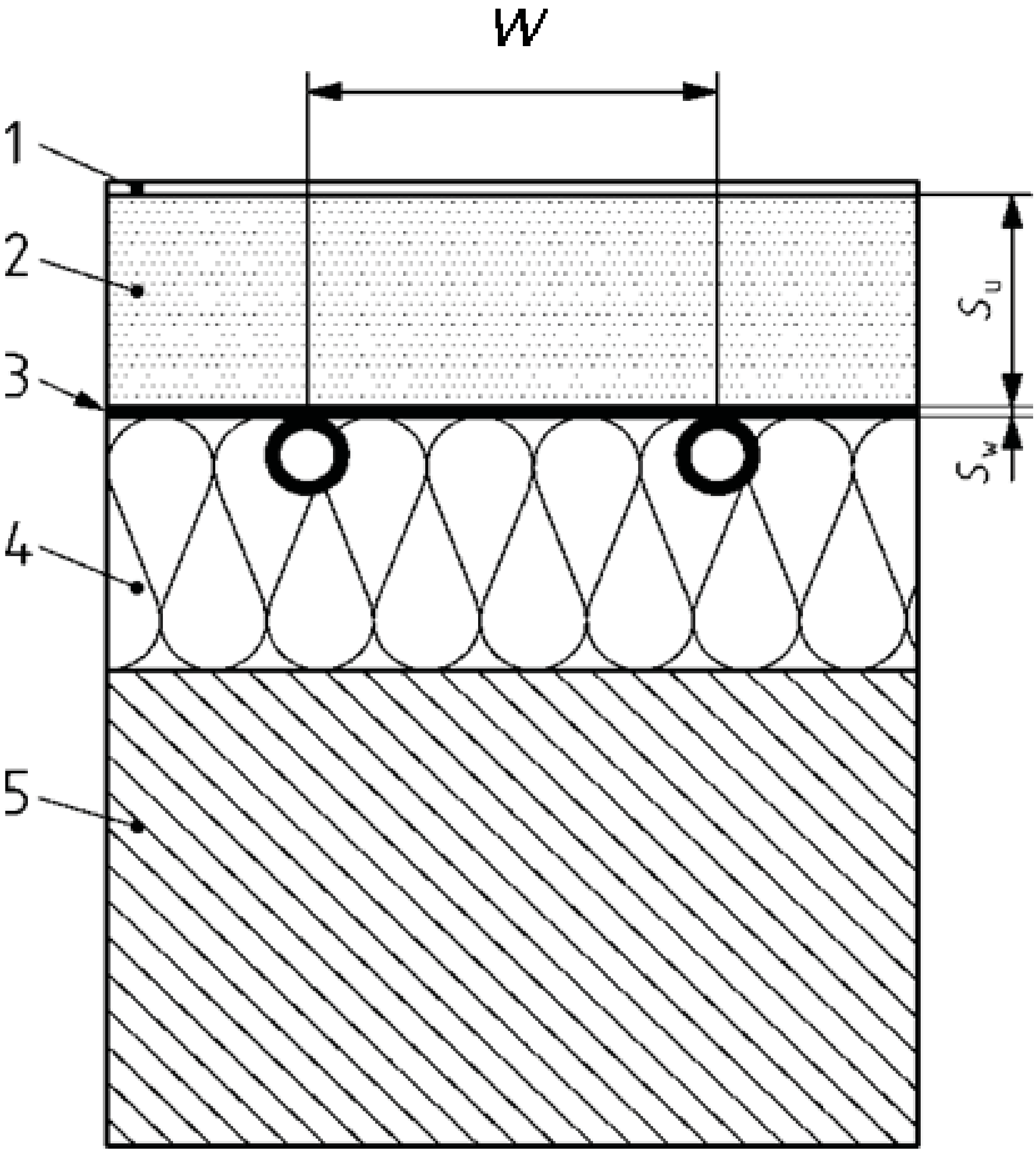

b) Type B

Key

1 floor covering
2 weight bearing and thermal diffusion layer (cement screed, anhydrite screed, asphalt screed, wood)
3 heat diffusion devices
4 thermal insulation
5 structural bearing

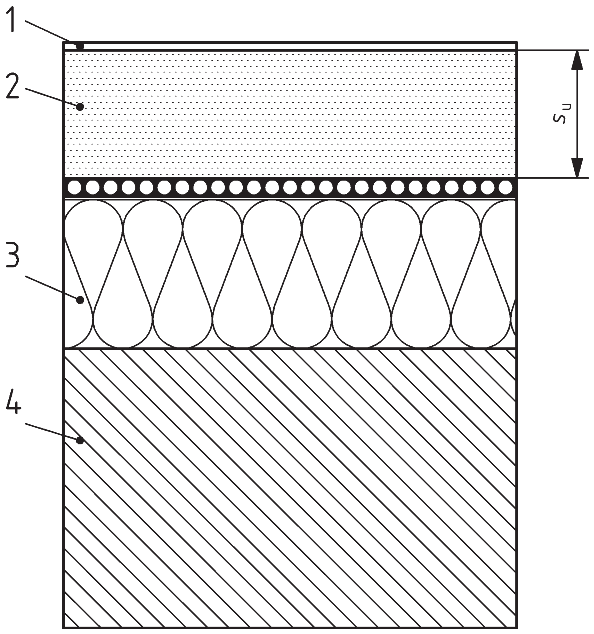

c) Type D

Key

1 floor covering R_λ, B
2 weight bearing and thermal diffusion layer (cement screed, anhydrite screed, asphalt screed, timber)
3 thermal insulation
4 structural bearing

Figure 2 — System types A, B and C covered by the method in Annex A

7.2 Thermal resistance methods

The heat flux between embedded pipes (temperature of heating or cooling medium) and the space or surface is calculated using thermal resistances.

The concept is shown in Figure 3.

An equivalent resistance, R_{HC}, between the heating or cooling medium to a fictive core (or heat conduction layer) at the position of the pipes is determined. This resistance includes the influence of type of pipe, pipe distance and method of pipe installation (in concrete, wooden construction, etc.). In this way a fictive core temperature is calculated. The heat transfer between this fictive layer and the surfaces, R_i and R_e (or space and neighbour space) is calculated using linear resistances (adding of resistance of the layers above and below the heat conductive layer).

The equivalent resistance of the heat conductive layer is calculated in different ways depending on the type of system.

This calculation method, using the general resistance concept, is given in Annex B for the following two types of systems:

- Type E with pipes embedded in massive concrete slabs (see Figure 4 and B.1);

- Type F with capillary pipes embedded in a layer at the inside surface (see Figure 5 and B.2).

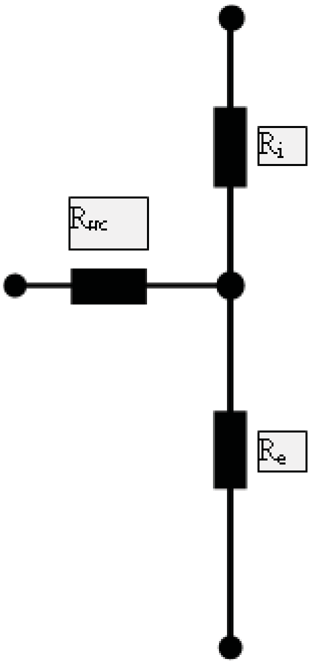

Figure 3 — Basic network of thermal resistance

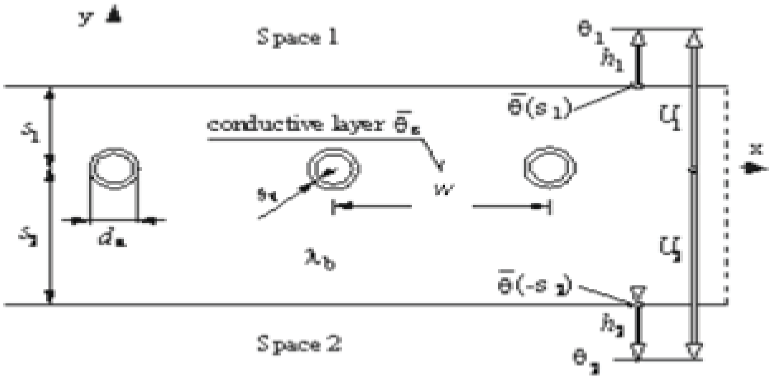

Figure 4 — Pipes embedded in a massive concrete layer, Type E

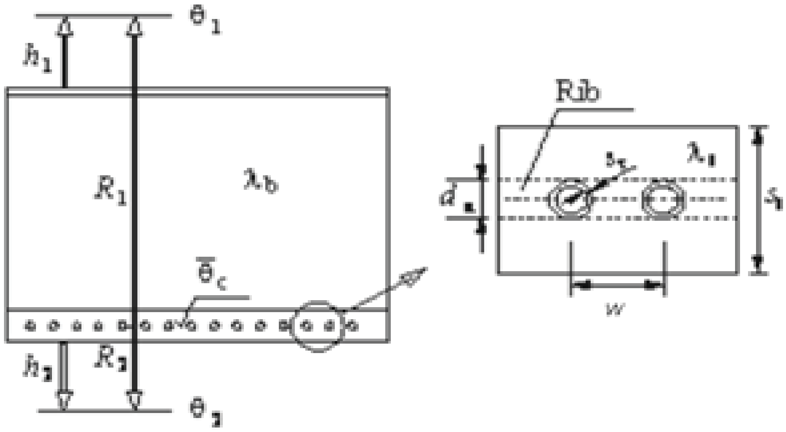

Figure 5 — Capillary pipes embedded in a layer at the inner surface, Type F

This calculation method, using the general resistance concept, is shown in Annex C for pipes embedded in wooden floor constructions using heat conducting plates (Figure 6).

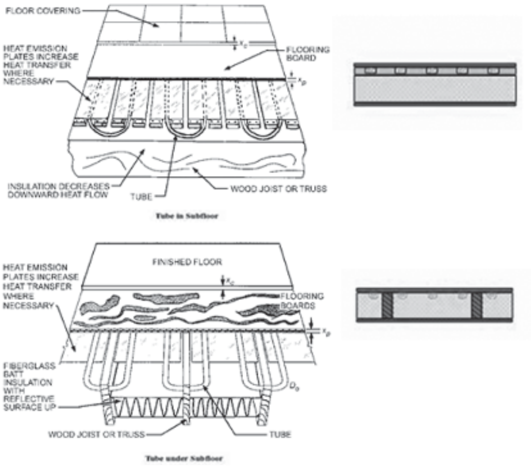

Figure 6 — Pipes in wooden constructions, TYPE G

The equivalent resistance of the conductive layer may also be determined either by calculation using Finite Element Analysis (FEA) or Finite Difference Methods (FDM) (see Clause 8) or by laboratory testing (as in, for example, EN 1264-2:2008, Annex B).

8 Use of basic calculation programmes

8.1 Basic calculation programmes

A numerical analysis by Finite Element Method or by Finite Difference Method shall be conducted in accordance with the state-of-the-art practice and the applicable codes and standards, in such a way that they can readily be verified. The calculation programme used shall be verified according to Annex D.

The numerical analysis may be used to calculate the heating and cooling capacity or the equivalent resistances. On basis of the equivalent resistances, the heating and cooling capacity is calculated for different temperature differences between the surface and the room.

8.2 Items to be included in a complete computation documentation

The following items are to be included in a complete computation documentation:

- representation and documentation of the structure to be analysed, by means of the technical drawings, diagrams and sketches;
- indication of the material data used as a basis and the requisite data sources;
- description of load cases used as a basis, including substantiation by codes and standards;
- description and representation of the numerical model applied, indicating the mathematical and physical basis, for example the element type, the shape functions, number of elements, nodes and degrees of freedom;
- name, verification, if available, and origin of the computation programme;

— description of the technical assumptions, simplifications and restrictions underlying the model.

9 Calculation of the heating and cooling capacity

In some of the described calculation methods, the heating and cooling capacity are determined directly (see Annex A).

In other described calculation methods, the average surface temperature is determined and the heating and cooling capacity is calculated according to:

$$q_{\mathrm{des}} = h_{\mathrm{t}} \left(|\theta_{\mathrm{s,m}} - \theta_{\mathrm{i}}| \right)$$

For evaluation of the performance of the system – and when calculating the total heating and cooling power needed from the energy generation system (boiler, heat exchanger, chiller, etc.) – the heat transfer at the outward (back) side shall also be considered. This heat transfer shall be regarded as a loss if the outward side is facing the outside, an un-conditioned space or another building entity, and it depends on the temperature difference between the pipe layer as well as the heat transfer resistance to and the temperature in the neighbour space or outside.

Annex A
(normative)

Calculation of the heat flux

A.1 General

The basic calculation is done for reference heating systems (see A.2).

For floor heating systems these results apply directly.

The method described in A.3 enables the conversion of these results into results for other surfaces in the room (ceiling and wall heating). The method is also applicable for all the cooling surfaces (floor, ceiling, wall cooling). This calculation method [1] is based on the results obtained in A.2.2/A.2.3 and A.2.4. The change in the surface thermal resistance $\Delta R_\alpha = \Delta(1/\alpha)$ influences the temperature field within the system in the same way as a change in the thermal resistance of the surface covering $\Delta R_{\lambda,\mathrm{B}}$[1].

A.2 Reference heating systems

A.2.1 General

The heat flux q at a surface is determined by the following parameters:

- pipe spacing W;
- thickness s_u and thermal conductivity λ_E of the layer above the pipe;
- thermal conduction resistance $R_{\lambda,\mathrm{B}}$ of covering;
- pipe external diameter $D = d_\mathrm{a}$, including sheathing ($D = d_\mathrm{M}$) if necessary and the thermal conductivity of the pipe λ_R and/or the sheathing λ_M. In the case of non-circular pipes, the equivalent diameter of circular pipes having the same circumference is to be calculated (the screed covering shall be used unchanged). The thickness and the thermal conduction resistance of firmly deposited barrier layers up to a thickness of 0,3 mm shall not be taken into consideration. In this case, $D = d_\mathrm{a}$ shall be used;
- heat conducting devices, characterized by the value K_WL in accordance with A.3;
- contact between the pipes and the heat conducting devices or screed, characterized by the factor a_K ;
- the heat-conducting layer of the heating system is thermally decoupled by the thermal insulation from the structural base of the building.

The heat flux is proportional to $(\Delta\theta_\mathrm{H})^n$, where the temperature difference between the heating medium and the room temperature is

$$\Delta\theta_\mathrm{H} \frac{\theta_\mathrm{V} - \theta_\mathrm{R}}{\ln\frac{\theta_\mathrm{V} - \theta_\mathrm{i}}{\theta_\mathrm{R} - \theta_\mathrm{i}}} \qquad \text{(A.1)}$$

and where experimental and theoretical investigations of the exponent n have shown that:

$1,0 < n < 1,05$

Within the limits of the achievable accuracy,

$n = 1$

is used.

The heat flux q is calculated by:

$$q = B \cdot \prod_i a_i^{m_\mathrm{i}} \cdot \Delta\theta_\mathrm{H} \tag{A.2}$$

where

B is a system-dependent coefficient in W/(m^2·K). This depends on the type of system;

$\prod_i (a_\mathrm{i}^{m_\mathrm{i}})$ is a power product which links the parameters of the structure together (see A.2.2, A.2.3 and A.2.4).

A distinction shall be made between systems with pipes inside the screed, systems with pipes below the screed and plane section systems. Equation (A.2) applies directly for usual constructions.

A.2.2 Systems with pipes inside the screed (type A and type C)

For these systems (see Figure A.1), the characteristic curves are calculated by:

$$q = B \cdot a_\mathrm{B} \cdot a_\mathrm{W}^{m_\mathrm{W}} \cdot a_\mathrm{U}^{m_\mathrm{U}} \cdot a_\mathrm{D}^{m_\mathrm{D}} \cdot \Delta\theta_\mathrm{H} \tag{A.3}$$

where

$B = B_0 = 6{,}7$ W/m^2·K

The B-values are valid for a thermal conductivity $\lambda_\mathrm{R} = \lambda_\mathrm{R,0} = 0{,}35$ W/(m·K) of the pipe and pipe wall thickness $s_\mathrm{R} = s_\mathrm{R,0} = (d_\mathrm{a} - d_\mathrm{i})/2 = 0{,}002$ m.

For other materials with different heat conductivity or pipe wall thickness or for sheathed pipes, B shall be calculated in accordance with A.2.6.

For a heating cement screed with reduced humidity, $\lambda_\mathrm{E} = 1{,}2$ W/(m·K) shall be used. This value is also applicable to levelling layers. If a different value is used, its validity shall be checked.

a_B - surface covering factor in accordance with the following equation

$$a_\mathrm{B} = \frac{\dfrac{1}{\alpha} + \dfrac{s_\mathrm{u,0}}{\lambda_\mathrm{u,0}}}{\dfrac{1}{\alpha} + \dfrac{s_\mathrm{u,0}}{\lambda_\mathrm{E}} + R_{\lambda,\mathrm{B}}} \tag{A.4}$$

where

α = 10,8 W/(m^2·K);

$\lambda_\mathrm{u,0}$ = 1 W/(m·K);

$s_{u,0}$ = 0,045 m;

$R_{\lambda,B}$ is the heat conduction resistance of the floor covering, in m^2·K/W;

λ_E is the heat conductivity of the screed, in W/(m·K);

α_w is the pipe spacing factor in accordance with Table A.1; $\alpha_w = f(R_{\lambda,B})$;

α_U is the covering factor in accordance with Table A.2; $\alpha_U = f(W, R_{\lambda,B})$;

α_D is the pipe external diameter factor in accordance with Table A.3; $\alpha_D = f(W, R_{\lambda,B})$.

$$m_W = 1 - \frac{W}{0{,}075} \tag{A.5}$$

where

0,050 m ≤ W ≤ 0,375 m (where W is the pipe spacing);

$$m_u = 100(0{,}045 - s_u); \tag{A.6}$$

where

$s_u \geq$ 0,010 m (where s_u is the thickness of the layer above the pipe);

$$m_D = 250(D - 0{,}020) \tag{A.7}$$

applies where 0,008 m ≤ D ≤ 0,030 m (where D is the external diameter of the pipe, including sheathing where used)

Equations (A.4) to (A.7) are valid for thickness of layer above pipe (inward) 0,065 m $< s_u \leq s_u$*, where: s_u* = 0,100 m for pipe spacing $W <$ 0,200m; s_u* = 0,5 W for pipe spacing $W >$ 0,200 m. The actual spacing W shall be used for calculation of s_u, also if $W >$0,375. For $s_u > s_u$*, the equivalent heat transfer coefficient is:

$$K_H = \frac{1}{\dfrac{1}{K_{H,\,s_u = s_u^*}} + \dfrac{s_u - s_u^*}{\lambda_E}} \tag{A.8}$$

In Equation (A.8), $K_{H,\,s_u=s_u^*}$ is the power product from Equation (A.3), calculated for a covering s_u^* above the pipe.

The heat flux is:

$$q = K_H \cdot \Delta\theta_H \tag{A.9}$$

For pipe spacing $W >$ 0,375 m, the heat flux is approximated by:

$$q = q_{0,375} \cdot \frac{0{,}375}{W} \tag{A.10}$$

where

$q_{0,375}$ is the heat flux, calculated for a spacing W = 0,375 m.

The limit curves are calculated in accordance with Equation (A.18) (see A.2.5).

Limitation of the method:

Position of pipes

Pipe spacing $W \geq 0{,}05$ m

Covering $s_u \geq 0{,}010$ m

Pipe diameter 0,008 m $\leq D \leq$ 0,03

$0{,}01 \leq s_u/\lambda_E \leq 0{,}0\,792$

A.2.3 Systems with pipes below the screed or timber floor (type B)

For these systems (see Figure A.2), the variable thickness s_u of the weight bearing layer and its variable thermal conductivity λ_E are represented by a factor α_U. The pipe diameter has no effect. However, the contact between the heating pipe and the heat conducting device or any other heat distribution device is an important parameter. The characteristic curve is calculated from

$$q = B \cdot a_B \cdot a_W^{m_W} \cdot a_U \cdot a_{WL} \cdot a_K \cdot \Delta\theta_H \tag{A.11}$$

where

$B = B_0 = 6{,}5$ W/m^2.K

The B-values are valid for a thermal conductivity $\lambda_R = \lambda_{R,0} = 0{,}35$ W/(m·K) of the pipe and pipe wall thickness $s_R = s_{R,0} = (d_a - d_i)/2 = 0{,}002$ m.

a_B surface covering factor:

$$a_B = \frac{1}{1 + B \cdot a_U \cdot a_W^{m_W} \cdot a_{WL} \cdot a_K \cdot R_{\lambda,B} \cdot \overline{f}(W)} \tag{A.12}$$

With $\overline{f}(W) = 1 + 0{,}44\sqrt{W}$

α_T pipe spacing factor in accordance with Table A.6; $a_T = f(s_u / \lambda_E)$

α_U covering factor which is calculated in accordance with the following equation:

$$a_U = \frac{\frac{1}{\alpha} + \frac{s_{u,0}}{\lambda_{u,0}}}{\frac{1}{\alpha} + \frac{s_u}{\lambda_E}} \tag{A.12a}$$

where

α = 10,8 W/(m^2·K);

$\lambda_{u,0}$ = 1 W/(m·K);

$s_{u,0}$ = 0,045 m;

a_{WL} is the heat conduction device factor in accordance with Table A.8; $a_{WL} = f(K_{WL}, W, D)$;

a_K is the correction factor for the contact in accordance with Table A.9; $a_K = f(W)$;

$$m_W = 1 - \frac{W}{0{,}075} \text{ applies for } 0{,}050\ m \le W \le 0{,}450\ m \text{ where } W \text{ is the pipe spacing} \tag{A.13}$$

The characteristic value K_{WL} is:

$$K_{WL} = \frac{s_{WL} \cdot \lambda_{WL} + b_u \cdot s_u \cdot \lambda_E}{0{,}125} \tag{A.14}$$

where

$b_u = f(W)$ according to Table A.7;

$s_{WL} \cdot \lambda_{WL}$ product of the thickness and the thermal conductivity of the heat conducting material;

$s_u \cdot \lambda_E$ is the product of the thickness and the thermal conductivity of the screed.

If the width L_{WL} of the heat conducting device is smaller than the pipe spacing W, the value determined for a_{WL} according to Table A.8 shall be corrected to:

$$a_{WL} = a_{WL,L_{WL}=W} - (a_{WL,L_{WL}=W} - a_{WL,L_{WL}=0}) \cdot \left[1 - 3{,}2(L_{WL}/W) + 3{,}4(L_{WL}/W)^2 - 1{,}2(L_{WL}/W)^3\right] \tag{A.15}$$

The heat conduction device factors $a_{WL,L_{WL}=W}$ and $a_{WL,L_{WL}=0}$ shall be taken from Table A.8.

For $L_{WL} = W$, tables for the characteristic value K_{WL} are directly applicable in accordance with Equation (A.14). For $L_{WL} = 0$, K_{WL} shall be constituted with $s_{WL} = 0$.

The correction factor for the contact, a_K, takes into account the additional heat transmission resistance caused by spot or line contact only between the pipe and the heat conducting device. This depends on the manufacturing tolerances of the pipes and conducting devices as well as on the care taken during installation and is therefore subject to fluctuations in individual cases. Table A.9, therefore, gives average values for a_K.

The limit curves are calculated in accordance with Equation (A.18) (see A.2.5).

Limitation of the method:

Position of pipes

Pipe spacing $0{,}050\ m \le W \le 0{,}450\ m$

$0{,}01 \le s_u/\lambda_E \le 0{,}0792$

A.2.4 Plane section systems

The following equation applies to surfaces fully covered with embedded heating or cooling elements (see Figure A.3):

$$q = B \cdot a_B \cdot a_W^{m_W} \cdot a_U \cdot \Delta\theta_H \tag{A.16}$$

where: $B = B_0$ =: 6,5 W/m^2.K

The B-values are valid for a thermal conductivity $\lambda_R = \lambda_{R,0}$ = 0,35 W/(m·K) of the pipe and pipe wall thickness $s_R = s_{R,0} = (d_a - d_i)/2$ = 0,002 m.

a_B surface covering factor:

$$a_B = \frac{1}{1 + B \cdot a_U \cdot a_T^{m_T} \cdot R_{\lambda,B}} \quad \text{(A.17)}$$

$$a_W^{m_W} = 1{,}06$$

a_U covering factor in accordance with Equation (A.12a).

A.2.5 Limits of heat flux

The procedure for the determination of the limits of the heat flux is shown in principle within Figure A.4.

The limit curve (see Figure A.4) gives the relationship between the specific thermal output and the temperature difference between the heating medium and the room for cases where the maximum permissible difference between surface temperature and indoor room temperature (9 K or 15 K respectively; see Table A.13) is achieved.

The limit curve is calculated using the following expression in form of a product:

The limit curves are calculated by:

$$q_G = \phi \cdot B_G \cdot \left[\frac{\Delta\theta_H}{\phi}\right]^{n_G} \quad \text{(A.18)}$$

Where:

B_G is a coefficient in accordance with:

for type A and C systems: Table A.4.1 or A.4.2 depending on the ratio s_u / λ_E

for type B systems: Table A.10

for plane section systems: B_G = 100 W/(m^2·K)

n_G is an exponent in accordance with:

for type A and C systems: Table A.5.1 or A.5.2 depending on the ratio s_u / λ_E

for type B systems: Table A.11

for plane section systems: $n_G = 0$

φ factor for conversion to any values of temperatures $\theta_{F,max}$ and θ_i:

$$\phi = \left[\frac{\theta_{\mathrm{F,max}} - \theta_{\mathrm{i}}}{\Delta\theta_{\mathrm{o}}} \right]^{1,1} \text{ with } \Delta\theta_{\mathrm{o}} = 9K \tag{A.19}$$

The intersection of the characteristic curve with the limit curve is calculated from:

$$\Delta\theta_{\mathrm{H,G}} = \phi \cdot \left[\frac{B_{\mathrm{G}}}{B \cdot \prod_{i} a_{\mathrm{i}}^{m_{\mathrm{i}}}} \right]^{\frac{1}{1-n_{\mathrm{G}}}} \tag{A.20}$$

The limit curves for type A and C systems, for $T > 0{,}375$ m, are calculated according to:

$$q_{\mathrm{G}} = q_{\mathrm{G;0,375}} \frac{0{,}375\,m}{W} \cdot f_{\mathrm{G}} \tag{A.21}$$

$$\Delta\theta_{\mathrm{H,G}} = \Delta\theta_{\mathrm{H,G;0,375}} \cdot f_{\mathrm{G}} \tag{A.22}$$

where

$q_{\mathrm{G;\,0,375}}$	is the limit heat flux, calculated for a spacing W = 0,375 m;
$\vartheta_{\mathrm{H,\,G;\,0,375}}$	is the limit temperature difference between the heating medium and the room, calculated for a spacing W = 0,375 m.

and

$$f_{\mathrm{G}} = 1{,}0 \text{ for } \frac{s_{\mathrm{u}}}{W} \leq 0{,}173$$

$$f_{\mathrm{G}} = \frac{q_{\mathrm{G,max}} - \left[q_{\mathrm{G,max}} - q_{\mathrm{G,0,375}} \cdot \frac{0{,}375\,m}{W} \right] \cdot e^{-20\cdot(s_{\mathrm{u}}/W - 0{,}173)^2}}{q_{\mathrm{G,0,375}} \cdot \frac{0{,}375\,m}{W}} \text{ for } \frac{s_{\mathrm{u}}}{W} > 0{,}173 \tag{A.23}$$

where

$q_{\mathrm{G,max}}$	is the maximum permissible heat flux in accordance with Table A.13, calculated for an isothermal surface temperature distribution using the basic characteristic curve (Figure A.1), with $(\theta_{\mathrm{F,\,m}} - \theta_{\mathrm{i}}) = (\theta_{\mathrm{F,\,max}} - \theta_{\mathrm{i}})$.

For type B systems, Equations (A.11) and (A.12) apply directly, when the pipe spacing W and the width of the heat diffusion device L_{WL} are the same. For $L_{\mathrm{WL}} < W$, the value of the heat flux $q_{\mathrm{G,\,L_{WL}\,=\,W}}$, calculated in accordance with Equation (A.11), shall be corrected using the following equation:

$$q_{\mathrm{G}} = \frac{a_{\mathrm{WL}}}{a_{\mathrm{WL},\,L_{\mathrm{WL}} = \mathrm{W}}} \cdot q_{\mathrm{G},\,L_{\mathrm{WL}} = W} \tag{A.24}$$

where

$a_{\mathrm{WL},\,L_{\mathrm{WL}} = W}$	is the heat conduction factor in accordance with Table A.8;
a_{WL}	is the heat conduction factor, calculated in accordance with Equation (A.15).

The limit temperature difference between the heating medium and the room $\Delta\vartheta_{\mathrm{H,G}}$ remains unchanged as with $L_{\mathrm{WT}} = W$.

For $\Delta\theta_{\mathrm{H}} = \theta_{\mathrm{F,max}} - \theta_{\mathrm{i}} = 9K$, $\varphi = 1$ and $R_{\lambda,\mathrm{B}} = 0$, the limit heat flux q_{G} is designated as the heat flux, q_{N}, and the associated heating medium differential temperature $\Delta\theta_{\mathrm{H}}$ is designated as the nominal heating medium differential temperature, $\Delta\theta_{\mathrm{N}}$.

The maximum possible value of the heat flux, $q_{\mathrm{G,max}}$, for isothermal surface temperature distribution lies on the basic characteristic curve (see Clause 6, Figure 1, where $\theta_{\mathrm{F,m}} = \theta_{\mathrm{F,max}} = \theta_{\mathrm{S,max}}$).

If values of q_{G} higher than $q_{\mathrm{G,max}}$ are determined by Equation (A.18), due to inaccuracy of calculations, interpolations and linearization, $q_{\mathrm{G}} = q_{\mathrm{G,max}}$ shall be applied.

A.2.6 Influence of pipe material, thickness of the pipe wall and pipe sheathing on the heat flux

The values of factor B_0 given above for Equations (A.3) and (A.11) are valid for a pipe thermal conductivity $\lambda_{\mathrm{R,0}} = 0{,}35$ W/(m·K), a wall thickness $s_{\mathrm{R,0}} = 0{,}002$ m and a heat exchange coefficient inside the pipe according to turbulent tube flow $\alpha_{\mathrm{turb}} = 2\,200$ W/(m^2 K). For other materials (see Table E.1) with a thermal conductivity of the pipe material λ_{R} or other wall thickness s_{R}, the factor B shall be determined by:

$$\frac{1}{B} = \frac{1}{B_0} + \frac{1{,}1}{\pi} \cdot \underset{i}{\Pi}\left(a_{\mathrm{i}}^{m_{\mathrm{i}}}\right) \cdot W \cdot \left[\frac{1}{2\lambda_{\mathrm{R}}} \ln \frac{d_{\mathrm{a}}}{d_{\mathrm{a}} - 2s_{\mathrm{R}}} - \frac{1}{2\lambda_{\mathrm{R,0}}} \ln \frac{d_{\mathrm{a}}}{d_{\mathrm{a}} - 2s_{\mathrm{R,0}}}\right] \tag{A.25}$$

If the pipe has an additional sheathing with an external diameter d_{M}, an internal diameter d_{a} and a heat conductivity of the sheathing λ_{M}, the following equations apply:

$$\frac{1}{B} = \frac{1}{B_0} + \frac{1{,}1}{\pi} \cdot \underset{i}{\Pi}\left(a_{\mathrm{i}}^{m_{\mathrm{i}}}\right) \cdot W \cdot \left[\frac{1}{2\lambda_{\mathrm{M}}} \ln \frac{d_{\mathrm{M}}}{d_{\mathrm{a}}} + \frac{1}{2\lambda_{\mathrm{R}}} \ln \frac{d_{\mathrm{a}}}{d_{\mathrm{a}} - 2s_{\mathrm{R}}} - \frac{1}{2\lambda_{\mathrm{R,0}}} \ln \frac{d_{\mathrm{M}}}{d_{\mathrm{M}} - 2s_{\mathrm{R,0}}}\right] \tag{A.26}$$

Where firmly deposited layers exist, the conversion of the factors need not be considered for thickness ≤ 0,3 mm. In this case, Equation (A.25) shall be used. In cases with air gaps within the sheathing, Equation (A.26) only applies if a valid average value λ_{M} including the air gaps is available.

Within the range of turbulent tube flows including the transition area, limited alterations of the heat exchange coefficient do not require consideration. In rare cases of application with laminar tube flow, however, a correction shall be performed. Given such a case with a laminar heat exchange coefficient α_{lam}, the following expanded version of the above-noted equation shall be used:

$$\frac{1}{B} = \frac{1}{B_0} + \frac{1{,}1}{\pi} \cdot \underset{i}{\Pi}\left(a_{\mathrm{i}}^{m_{\mathrm{i}}}\right) \cdot W \cdot$$

$$\left[\frac{1}{2\lambda_{\mathrm{R}}} \ln \frac{d_{\mathrm{a}}}{d_{\mathrm{a}} - 2s_{\mathrm{R}}} - \frac{1}{2\lambda_{\mathrm{R,0}}} \ln \frac{d_{\mathrm{a}}}{d_{\mathrm{a}} - 2s_{\mathrm{R,0}}} + \frac{1}{\alpha_{\mathrm{lam}}(d_a - 2s_{\mathrm{R}})} - \frac{1}{\alpha_{\mathrm{turb}}(d_a - 2s_{\mathrm{R,0}})}\right] \tag{A.25a}$$

$$\frac{1}{B} = \frac{1}{B_0} + \frac{1{,}1}{\pi} \cdot \underset{i}{\Pi}\left(a_{\mathrm{i}}^{m_{\mathrm{i}}}\right) \cdot W \cdot$$

$$\left[\frac{1}{2\lambda_{\mathrm{M}}} \ln \frac{d_{\mathrm{M}}}{d_{\mathrm{a}}} + \frac{1}{2\lambda_{\mathrm{R}}} \ln \frac{d_{\mathrm{a}}}{d_{\mathrm{a}} - 2s_{\mathrm{R}}} - \frac{1}{2\lambda_{\mathrm{R,0}}} \ln \frac{d_{\mathrm{M}}}{d_{\mathrm{M}} - 2s_{\mathrm{R,0}}} + \frac{1}{\alpha_{\mathrm{lam}}(d_{\mathrm{a}} - 2s_{\mathrm{R}})} - \frac{1}{\alpha_{\mathrm{turb}}(d_{\mathrm{M}} - 2s_{\mathrm{R,0}})}\right] \tag{A.26a}$$

In these equations, α_{turb} = 2 200 W/(m^{2}K) and α_{lam} = 200 W/(m^{2}K). Both values are average values. To characterize if the flow is turbulent or laminar the Reynolds-equations can be used $\text{Re} = w \cdot d / \nu$, where d is the internal diameter of the pipe, w is the average velocity of the flow and ν is the kinematic viscosity of the water with an average value of 8,0*10^{-7} m^2/s. Laminar flow is recognized if $\text{Re} < 2\,320$ applies.

A.2.7 Thermal conductivity of screed with fixing inserts

For type A systems, the thermal conductivity in the screed is changed by inserts such as attachment studs or similar components. If their volume percent in the screed amounts to 15 % $\geq \psi \geq$ 5 %, an effective thermal conductivity of the component, λ'_{E}, shall be used for calculations:

$$\lambda'_{\text{E}} = (1-\psi) \cdot \lambda_{\text{E}} + \psi \cdot \lambda_{\text{W}} \tag{A.27}$$

where

λ_{E} is the thermal conductivity of the screed

λ_{W} is the thermal conductivity of the attachment studs

ψ is the volume ratio of the attachment studs in the screed.

A.2.8 Downward heat loss

The downward specific heat loss of floor heating systems towards rooms under the system is calculated in accordance with the following equation:

$$q_{\text{U}} = \frac{1}{R_{\text{u}}} \cdot (R_{\text{o}} \cdot q + \theta_{\text{i}} - \theta_{\text{u}}) \tag{A.28}$$

where

q_{U} is the downward specific heat loss;

q is the heat flux of the floor heating system;

R_{u} is the downwards partial heat transmission resistance of the floor structure;

R_{o} is the upwards partial heat transmission resistance of the floor structure;

θ_{i} is the standard indoor room temperature of the floor heated room;

θ_{u} is the indoor room temperature of a room under the floor heated room.

$$R_{\text{o}} = \frac{1}{\alpha} + R_{\lambda,\text{B}} + \frac{s_{\text{u}}}{\lambda_{\text{U}}} \tag{A.29}$$

where

$1/\alpha$ = 0,0926 m^2·K/W

$$R_{\text{u}} = R_{\lambda,\text{ins}} + R_{\lambda,\text{ceiling}} + R_{\lambda,\text{plaster}} + R_{\alpha,\text{ceiling}} \tag{A.30}$$

where

$R_{\alpha,\text{ceiling}}$ = 0,17 $\text{m}^2\cdot\text{K/W}$

In the special case of $\theta_\text{i} = \theta_\text{U}$ the simple Equation (A.31) applies.

$$q_\text{U} = q \cdot \frac{R_\text{o}}{R_\text{u}} \tag{A.31}$$

A.3 Heating and cooling surfaces embedded in floors, ceilings and walls

The calculation method[1] is based on the results obtained in A.2.2/A.2.3 and A.2.4 of this part of ISO 11855. The method enables the conversion of these results into results for other surfaces in the room (ceiling and wall heating). The method is also applicable for all the cooling surfaces (floor, ceiling, wall cooling). The change in the surface thermal resistance $\Delta R_\alpha = \Delta(1/\alpha)$ influences the temperature filed within the system in the same way as a change in the thermal resistance of the surface covering $\Delta R_{\lambda,\text{B}}$[1]. This is based on the assumption that all other boundary conditions are unchanged and that the dew point is not reached. This leads to Equation (A.32).

$$K_\text{H} = K_\text{H}(\Delta R_\alpha, R_{\lambda,\text{B}}) = \frac{K_\text{H,Floor}}{1 + \dfrac{\Delta R_\alpha + R_{\lambda,\text{B}}}{R^*_{\lambda,\text{B}}}\left(\dfrac{K_\text{H,Floor}}{K^*_\text{H,Floor}} - 1\right)} \tag{A.32}$$

The gradient of the characteristic curve K_H [Equation (A.33)] is also referred to as equivalent heat transmission coefficient. The characteristic curve (see Figures A.5 and A.6) gives the relationship between the heat flux q and the temperature difference $\Delta\theta_\text{H}$ between the heating medium and the room (heating system) or between the room and the cooling medium (cooling system):

$$q = K_\text{H}\Delta\theta_\text{H} \tag{A.33}$$

where

$K_\text{H}=K_\text{H}(\Delta R_\alpha, R_{\lambda,\text{B}})$	is the gradient of the characteristic curve [see Equation (A.33)] of the heating/cooling system which shall be calculated, with the actual thermal resistance of the covering $R_{\lambda,\text{B}} \geq 0$ an the respective value ΔR_α (see Table A.12);
$K_\text{H,Floor}=K_\text{H,Floor}(R_{\lambda,\text{B}}=0)$	is the gradient of the characteristic curve of the same system with the thermal resistance of the covering $R_{\lambda,\text{B}} = 0$ obtained from A.2.2/A.2.3 and A.2.4;
$K^*_\text{H,Floor}=K^*_\text{H,Floor}(R^*_{\lambda,\text{B}})$	is the gradient of the characteristic curve of the same system with a higher thermal resistance of covering $R^*_{\lambda,\text{B}} > R_{\lambda,\text{B}}$, obtained from A.2.2/A.2.3 and A.2.4. In this annex, generally $R^*_{\lambda,\text{B}}$ = 0,15 m²K/W applies;
ΔR_α	is the additional thermal transfer resistance to be calculated for the surface in question [see Equation (A.34) and Table A.12].

$$\Delta R_\alpha = 1/\alpha - 1/10{,}8\ \text{m}^2\text{K/W} \tag{A34}$$

In the case of wall heating and cooling systems, the results of the calculation method described above stringently are valid only for heating or cooling surfaces which fully cover the respective wall. But the accuracy is also sufficient for cases where the wall is partially covered.

A.4 Figures and tables

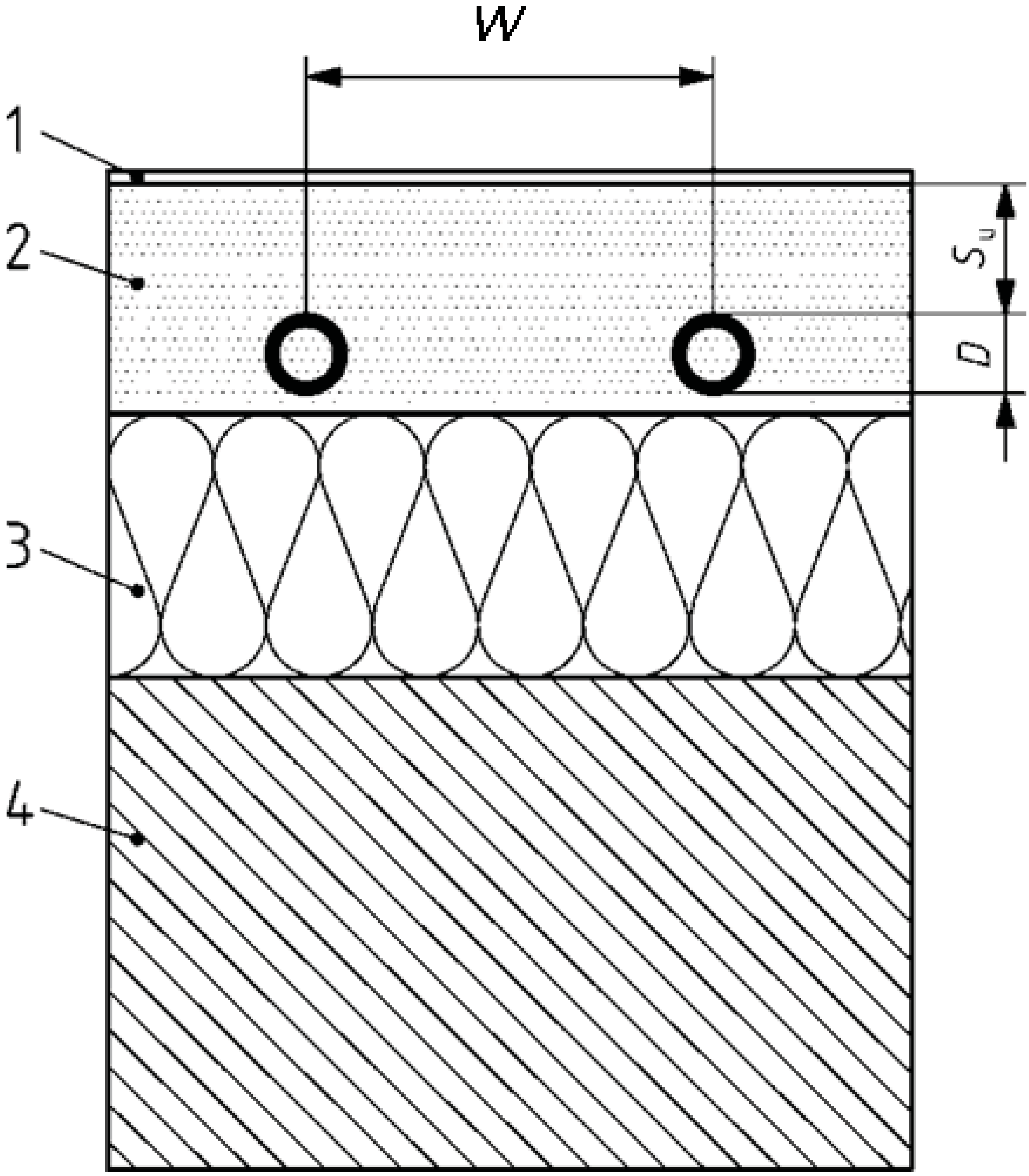

Key

1 floor covering $R_{\lambda, B}$

2 weight bearing and thermal diffusion layer λ_E (cement screed, anhydrite screed, asphalt screed). The thickness between the pipes and the insulation layer is in the range of 0 mm to 10 mm.

3 thermal insulation

4 structural base

Figure A.1 — Systems with pipes inside the screed (type A and type C)

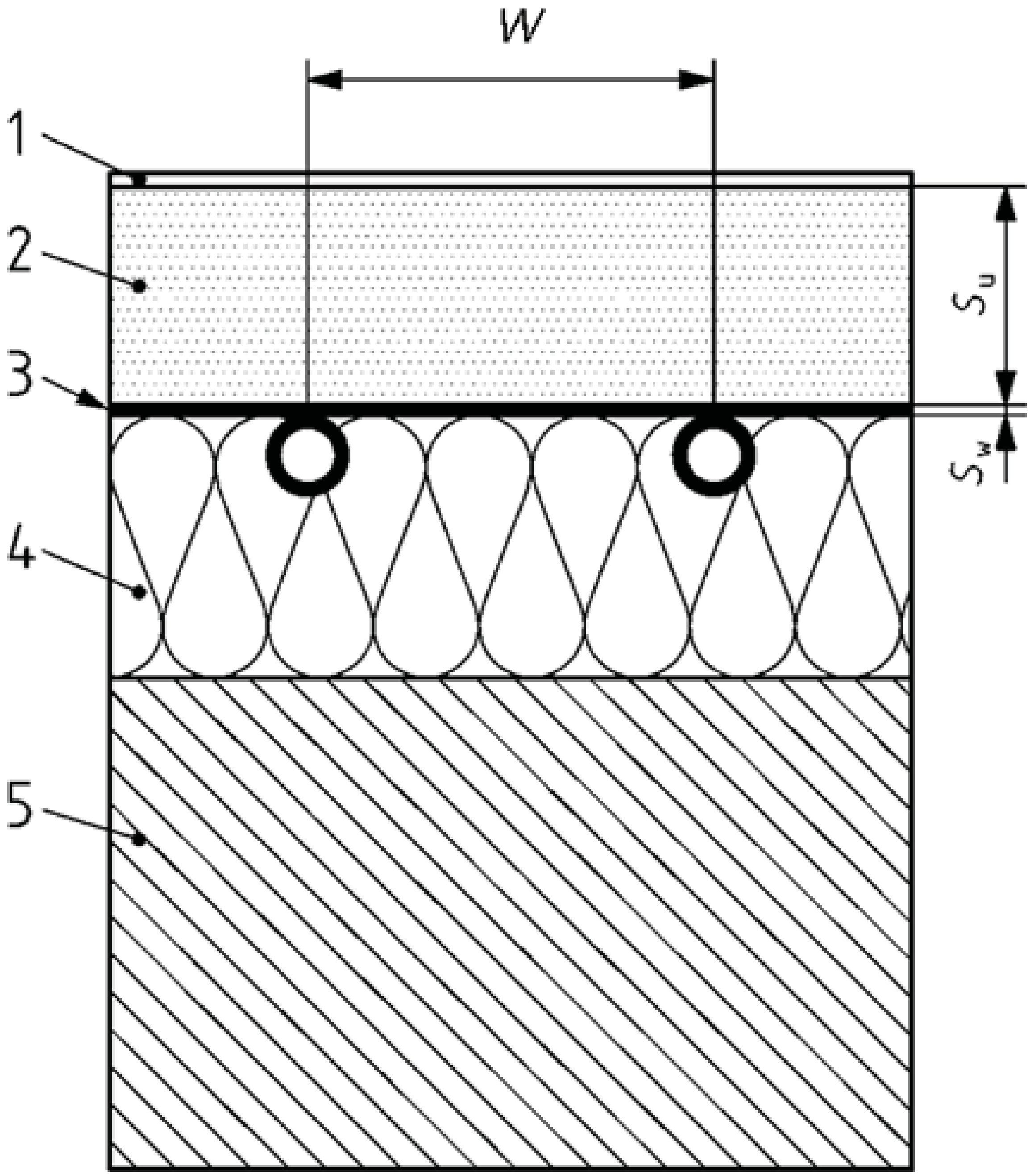

Key

1 floor covering $R_{\lambda, \mathrm{B}}$
2 weight bearing layer λ_{E} (cement screed, anhydrite screed, asphalt screed, timber)
3 heat diffusion device
4 thermal insulation
5 structural base

Figure A.2 — System with pipes below the screed (type B)

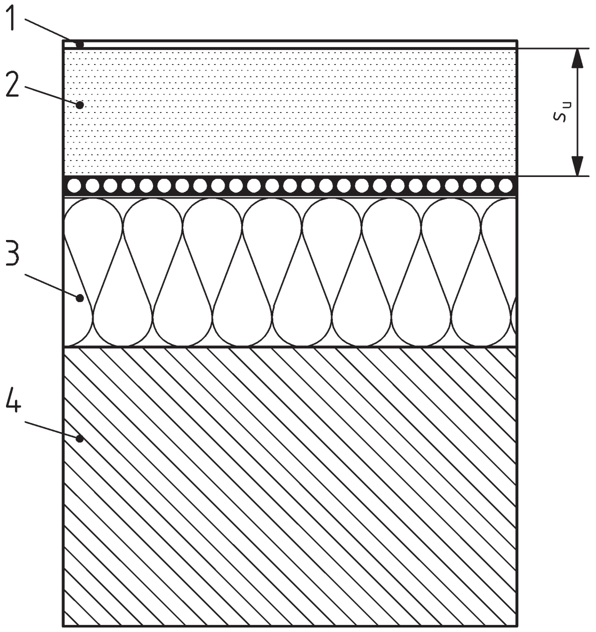

Key

1 floor covering $R_{\lambda, \mathrm{B}}$

2 weight bearing and thermal diffusion layer λ_{E} (cement screed, anhydrite screed, asphalt screed, timber)

3 thermal insulation

4 structural base

Figure A.3 — Systems with surface elements (plane section systems, type D)

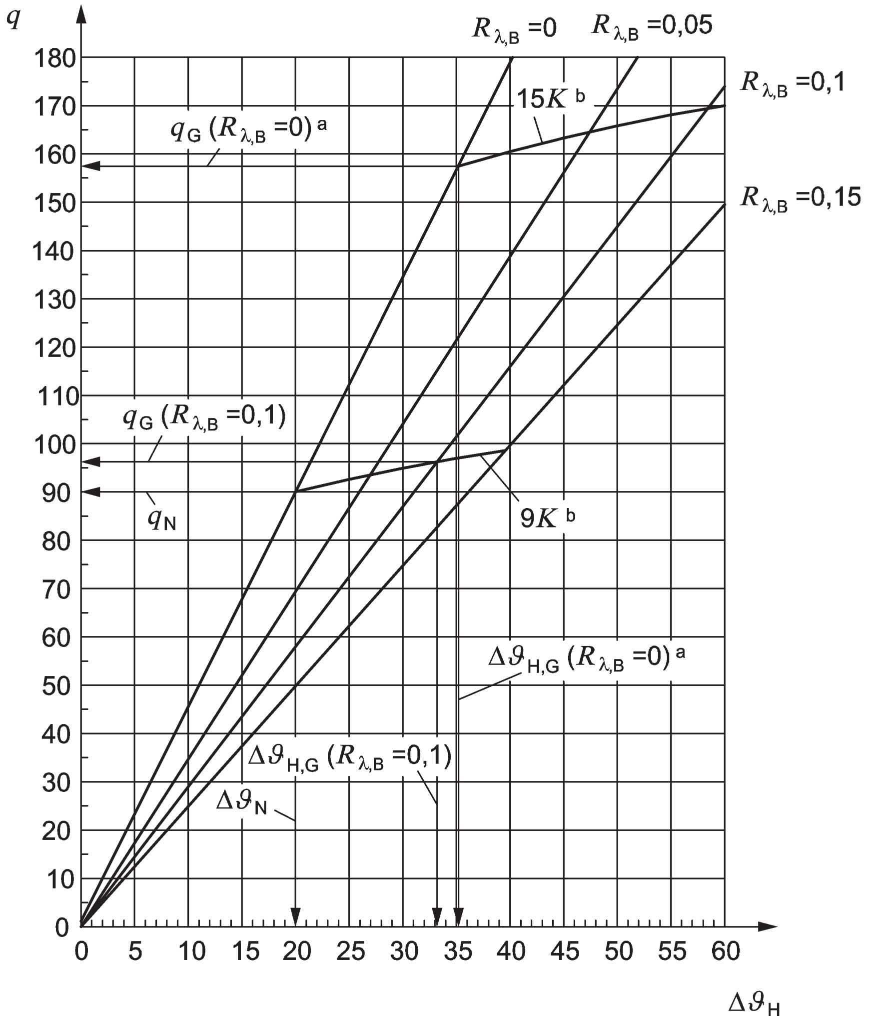

Key

q heat flux W/m^2

$\Delta\vartheta_H$ temperature difference between heating medium and room K

[a] Peripheral area.

[b] Limit curves.

Figure A.4 — Procedure in principle for determination of limits for heat flux

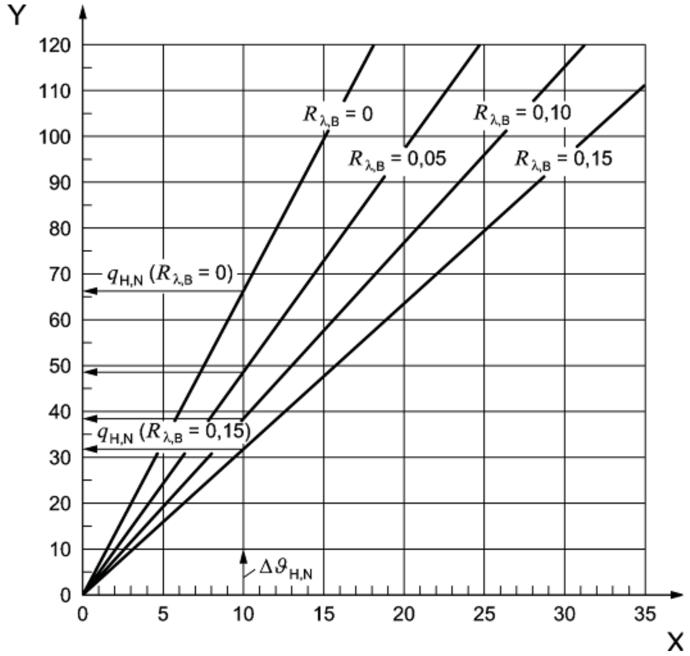

Key

Y heat flux q_H W/m^2

X temperature difference between heating medium and room $\Delta\vartheta_H$ K

Figure A.5 — Field of characteristic curves of a heating system

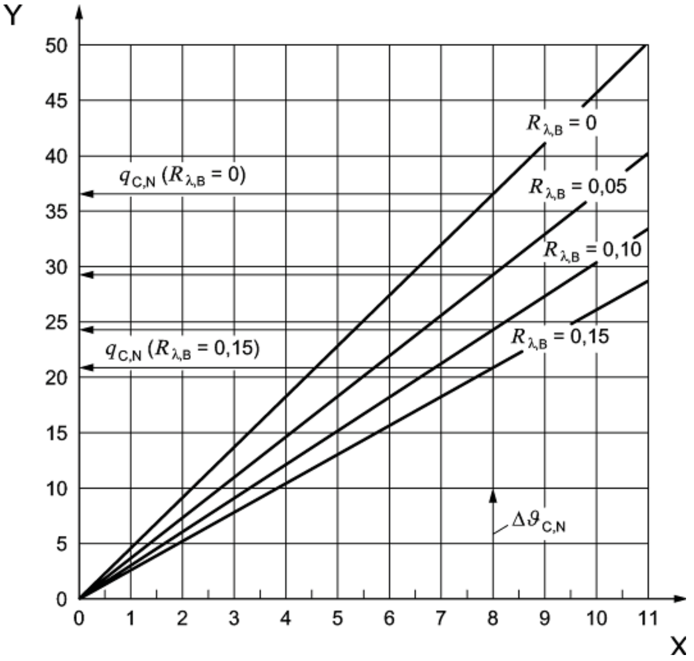

Key

Y heat flux q_c W/m^2

X temperature difference between room and cooling medium $\Delta\vartheta_c$ K

Figure A.6 — Field of characteristic curves of a cooling system

For all tables, intermediate values shall be interpolated with the aid of a natural cubic spline function.

Table A.1 — Pipe spacing factor α_W for types A and C systems

$R_{\lambda,B}$ (m^{2}K/W)	**0**	**0,05**	**0,10**	**0,15**
α_W	1,23	1,188	1,156	1,134

Table A.2 — Covering factor α_U depending on pipe spacing T and thermal resistance $R_{\lambda,B}$ of the surface covering for types A and C systems

$R_{\lambda,B}$ (m^{2}K/W)	**0**	**0,05**	**0,10**	**0,15**
W (m)	**Covering factor α_U**			
0,05	1,069	1,065	1,043	1,037
0,075	1,066	1,053	1,041	1,035
0,1	1,063	1,05	1,039	1,0 335
0,15	1,057	1,046	1,035	1,0 305
0,2	1,051	1,041	1,0 315	1,0 275
0,225	1,048	1,038	1,0 295	1,026
0,3	1,0 395	1,031	1,024	1,021
0,375	1,03	1,0 221	1,018	1,015

Table A.3 — Pipe external diameter factor α_D depending on thermal resistance $R_{\lambda,B}$ of the floor covering and the pipe spacing W for types A and C systems

$R_{\lambda.B}$ (m^{2}K/W)	**0**	**0,05**	**0,10**	**0,15**
W (m)	**Pipe external diameter factor α_D**			
0,05	1,013	1,013	1,012	1,011
0,075	1,021	1,019	1,016	1,014
0,1	1,029	1,025	1,022	1,018
0,15	1,04	1,034	1,029	1,024
0,2	1,046	1,04	1,035	1,03
0,225	1,049	1,043	1,038	1,033
0,3	1,053	1,049	1,044	1,039
0,375	1,056	1,051	1,046	1,042

Table A.4 Coefficient BG depending on thickness s_u and pipe spacing W for type A and C systems

The table is split into two depending on the ratio $\frac{s_u}{\lambda_E}$

Table A.4.1 — Coefficient B_G for $\frac{s_u}{\lambda_E} \leq 0{,}0792$

s_u / λ_E (m²·K/W)	0,01	0,0 208	0,0 292	0,0 375	0,0 458	0,0 542	0,0 625	0,0 708	0,0 792
W (m)	B_G (W/m²K)								
0,05	85,0	91,5	96,8	100	100	100	100	100	100
0,075	75,3	83,5	89,9	96,3	99,5	100	100	100	100
0,1	66,0	75,4	82,9	89,3	95,5	98,8	100	100	100
0,15	51,0	61,1	69,2	76,3	82,7	87,5	91,8	95,1	97,8
0,2	38,5	48,2	56,2	63,1	69,1	74,5	81,3	86,4	90,0
0,225	33,0	42,5	49,5	56,5	62	67,5	75,3	81,6	86,1
0,3	20,5	26,8	31,6	36,4	41,5	47,5	57,5	65,3	72,4
0,375	11,5	13,7	15,5	18,2	21,5	27,5	40,0	49,1	58,3

Table A.4.2 — Coefficient B_G for $\frac{s_u}{\lambda_E} > 0{,}0792$

s_u / W	B_G (W/m²K)
0,173	27,5
0,20	40,0
0,25	57,5
0,30	69,5
0,35	78,2
0,40	84,4
0,45	88,3
0,50	91,6
0,55	94,0
0,60	96,3
0,65	98,6
0,70	99,8
>0,70	100

Table A.5 — Exponent n_G depending on thickness s_u and pipe spacing W for type A and C systems

The table is split into two depending on the ratio $\frac{s_u}{\lambda_E}$

Table A.5.1 — Exponent n_G for $\frac{s_u}{\lambda_E} \leq 0{,}0792$

+	0,01	0,0 208	0,0 292	0,0 375	0,0 458	0,0 542	0,0 625	0,0 708	0,0 792
W (m)	n_G								
0,05	0,008	0,005	0,002	0	0	0	0	0	0
0,075	0,024	0,021	0,018	0,011	0,002	0	0	0	0
0,1	0,046	0,043	0,041	0,033	0,014	0,005	0	0	0
0,15	0,088	0,085	0,082	0,076	0,055	0,038	0,024	0,014	0,006
0,2	0,131	0,13	0,129	0,123	0,105	0,083	0,057	0,040	0,028
0,225	0,155	0,154	0,153	0,146	0,13	0,11	0,077	0,056	0,041
0,2 625	0,197	0,196	0,196	0,19	0,173	0,15	0,110	0,083	0,062
0,3	0,254	0,253	0,253	0,245	0,228	0,195	0,145	0,114	0,086
0,3 375	0,322	0,321	0,321	0,31	0,293	0,260	0,187	0,148	0,115
0,375	0,422	0,421	0,421	0,405	0,385	0,325	0,230	0,183	0,142

Table A.5.2 — Exponent n_G for $\frac{s_u}{\lambda_E} > 0{,}0792$

s_u / W	n_G
0,173	0,320
0,20	0,230
0,25	0,145
0,30	0,097
0,35	0,067
0,40	0,048
0,45	0,033
0,50	0,023
0,55	0,015
0,60	0,009
0,65	0,005
0,70	0,002
>0,70	0

Table A.6 — Pipe spacing factor α_W for type B systems

s_u / λ_E (m²K/W)	**0,01**	**0,02**	**0,03**	**0,04**	**0,05**	**0,06**	**0,08**	**0,1**	**0,15**	**0,18**
α_W	1,103	1,1	1,097	1,093	1,091	1,088	1,082	1,075	1,064	1,059

Table A.7 — Factor b_u depending on pipe spacing W for type B systems

W (m)	**0,05**	**0,075**	**0,1**	**0,15**	**0,2**	**0,225**	**0,3**	**0,375**	**0,45**
b_u	1	1	1	0,7	0,5	0,43	0,25	0,1	0

Table A.8 — Heat conduction device factor α_{WL} depending on pipe spacing W, pipe external diameter D and characteristic value K_{WL} for type B systems (the table is split into six for different values of K_{WL})

Table A.8.1 — Heat conduction device factor α_{WL} for characteristic value K_{WL} = 0

D (m)	0,022	0,020	0,018	0,016	0,014
W (m)	α_{WL}				
0,05	0,96	0,93	0,9	0,86	0,82
0,075	0,8	0,754	0,7	0,644	0,59
0,1	0,658	0,617	0,576	0,533	0,488
0,15	0,505	0,47	0,444	0,415	0,387
0,2	0,422	0,4	0,379	0,357	0,337
0,225	0,396	0,376	0,357	0,34	0,32
0,3	0,344	0,33	0,315	0,3	0,288
0,375	0,312	0,3	0,29	0,278	0,266
0,45	0,3	0,29	0,28	0,264	0,25

Table A.8.2 — Heat conduction device factor α_{WL} for characteristic value K_{WL} = 0,1

D (m)	0,022	0,020	0,018	0,016	0,014
W (m)	α_{WL}				
0,05	0,975	0,955	0,930	0,905	0,88
0,075	0,859	0,836	0,812	0,776	0,74
0,1	0,77	0,76	0,726	0,693	0,66
0,15	0,642	0,621	0,6	0,58	0,561
0,2	0,57	0,55	0,53	0,51	0,49
0,225	0,54	0,522	0,504	0,485	0,467
0,3	0,472	0,462	0,453	0,444	0,435

0,375	0,46	0,446	0,434	0,421	0,411
0,45	0,45	0,44	0,43	0,42	0,41

Table A.8.3 — Heat conduction device factor α_{WL} for characteristic value K_{WL} = 0,2

D (m)	0,022	0,020	0,018	0,016	0,014
W (m)	α_{WL}				
0,05	0,985	0,97	0,955	0,937	0,92
0,075	0,902	0,893	0,885	0,865	0,845
0,1	0,855	0,843	0,832	0,821	0,81
0,15	0,775	0,765	0,755	0,745	0,735
0,2	0,71	0,703	0,695	0,688	0,68
0,225	0,685	0,678	0,67	0,663	0,655
0,3	0,615	0,608	0,6	0,592	0,585
0,375	0,58	0,573	0,565	0,558	0,55
0,45	0,57	0,565	0,56	0,555	0,55

Table A.8.4 — Heat conduction device factor α_{WL} for characteristic value K_{WL} = 0,3

D (m)	0,022	0,020	0,018	0,016	0,014
W (m)	α_{WL}				
0,05	0,99	0,98	0,97	0,96	0,95
0,075	0,94	0,935	0,93	0,925	0,92
0,1	0,92	0,915	0,91	0,905	0,9
0,15	0,855	0,855	0,855	0,855	0,855
0,2	0,8	0,8	0,8	0,8	0,8
0,225	0,79	0,79	0,79	0,79	0,79
0,3	0,72	0,72	0,72	0,72	0,72
0,375	0,69	0,69	0,69	0,69	0,69
0,45	0,68	0,68	0,68	0,68	0,68

Table A.8.5 — Heat conduction device factor α_{WL} for characteristic value K_{WL} = 0,4

D **(m)**	0,022	0,020	0,018	0,016	0,014
W (m)	α_{WL}				
0,05	0,995	0,99	0,985	0,978	0,97
0,075	0,96	0,962	0,963	0,964	0,965
0,1	0,94	0,94	0,94	0,94	0,94
0,15	0,895	0,895	0,895	0,895	0,895
0,2	0,86	0,86	0,86	0,86	0,86
0,225	0,84	0,84	0,84	0,84	0,84
0,3	0,78	0,78	0,78	0,78	0,78
0,375	0,76	0,76	0,76	0,76	0,76
0,45	0,75	0,75	0,75	0,75	0,75

Table A.8.6 — Heat conduction device factor α_{WL} for characteristic value $K_{\mathrm{WL}} \geq 0,5$ (α_{WL} no longer dependent on D)

K_{WL}	0,5	0,6	0,7	0,8	0,9	1,0	∞
W (m)	α_{WL}						
0,05	0,995	0,998	1	1	1	1	1
0,075	0,979	0,984	0,99	0,995	0,998	1	1,01
0,1	0,963	0,972	0,98	0,988	0,995	1	1,02
0,15	0,924	0,945	0,96	0,974	0,99	1	1,04
0,2	0,894	0,921	0,943	0,961	0,98	1	1,06
0,225	0,88	0,908	0,934	0,955	0,975	1	1,07
0,3	0,83	0,87	0,91	0,94	0,97	1	1,09
0,375	0,815	0,86	0,90	0,93	0,97	1	1,1
0,45	0,81	0,86	0,90	0,93	0,97	1	1,1

$K_{\mathrm{WL}}>1$

$$a_{\mathrm{WL}} = \left[a_{\mathrm{WL}}\right]_{K_{\mathrm{WL}=\infty}} - \left(\left[a_{\mathrm{WL}}\right]_{K_{\mathrm{WL}=\infty}} - \left[a_{\mathrm{WL}}\right]_{K_{\mathrm{WL}=0}}\right)\left[\frac{\left[a_{\mathrm{WL}}\right]_{K_{\mathrm{WL}=\infty}} - 1}{\left[a_{\mathrm{WL}}\right]_{K_{\mathrm{WL}=\infty}} - \left[a_{\mathrm{WL}}\right]_{K_{\mathrm{WL}=0}}}\right]^{K_{\mathrm{WL}}}$$

Table A.9 — Correction factor for the contact α_{K} for type B systems

W (m)	**0,05**	**0,075**	**0,1**	**0,15**	**0,2**	**0,225**	**0,3**	**0,375**	**0,45**
α_{K}	1	0,99	0,98	0,95	0,92	0,9	0,82	0,72	0,60

Table A.10 — Coefficient B_G depending on K_{WL} and pipe spacing W for type B systems

W (m)	0,05	0,075	0,1	0,15	0,2	0,225	0,3	0,375	0,45
K_{WL}	B_G (W/m^{2}K)								
0,1	92	86,7	79,4	64,8	50,8	45,8	27,5	9,9	0
0,2	93,1	88	81,3	67,5	54,2	49	31,8	15,8	2,4
0,3	94,2	89,5	83,3	70,2	57,6	52,5	36	21,3	7,0
0,4	95,4	90,7	85,2	72,9	60,8	56	40,2	25,7	11,9
0,5	96,6	92,1	87,2	75,6	64,1	59,3	44,4	30	16,6
0,6	97,8	93,7	89,2	78,3	67,3	62,6	48,6	34,1	21,1
0,7	98,7	95	91	81	70,6	66,3	52,8	38,5	25,5
0,8	99,3	96,3	93	83,7	74	69,7	57	42,8	29,6
0,9	99,8	97,7	95	86,3	77,2	73	61,2	47	33,6
1,0	100	98,5	96,5	89	80,7	76,6	65,4	51,4	37,3
1,1	100	99,3	97,8	91,5	84	80	69,4	55,6	40,9
1,2	100	99,6	98,5	93,8	87,2	83,3	73,2	59,8	44,3
1,3	100	99,8	99,3	95,8	90	86,3	76,6	63,8	47,5
1,4	100	100	99,8	97,5	92,5	89	80	67,3	50,5
1,5	100	100	100	98,6	94,8	91,7	83	71	53,4

Table A.11 — Exponent n_G depending on K_{WL} and pipe spacing W for type B systems

W (m)	0,05	0,075	0,1	0,15	0,2	0,225	0,3	0,375	0,45
K_{WL}	n_G								
0,1	0,0029	0,017	0,032	0,067	0,122	0,151	0,235	0,333	1
0,2	0,0024	0,015	0,027	0,055	0,097	0,120	0,184	0,288	0,725
0,3	0,0021	0,013	0,024	0,048	0,086	0,104	0,169	0,256	0,482
0,4	0,0018	0,012	0,022	0,044	0,08	0,095	0,156	0,228	0,38
0,5	0,0015	0,011	0,02	0,04	0,074	0,088	0,143	0,204	0,31
0,6	0,0012	0,0099	0,018	0,037	0,067	0,082	0,131	0,183	0,25
0,7	0,0009	0,0087	0,016	0,033	0,061	0,074	0,118	0,162	0,21
0,8	0,0006	0,0074	0,014	0,03	0,055	0,067	0,106	0,144	0,187
0,9	0,0003	0,0062	0,012	0,027	0,049	0,06	0,095	0,126	0,165
1,0	0	0,005	0,01	0,024	0,044	0,053	0,083	0,11	0,143
1,1	0	0,0038	0,008	0,021	0,038	0,046	0,072	0,096	0,121
1,2	0	0,0025	0,006	0,018	0,032	0,038	0,063	0,084	0,107
1,3	0	0,0012	0,004	0,015	0,027	0,034	0,054	0,073	0,093
1,4	0	0	0,002	0,012	0,022	0,029	0,047	0,063	0,080
1,5	0	0	0	0,009	0,02	0,025	0,04	0,055	0,070

Table A.12 — Additional thermal transfer resistance

Case of application	α W/(m^2·K)	$\Delta R\alpha$ = 1/α - 1/10,8 m^2·K/W
Floor heating	10,8	0,000 0
Floor cooling	6,5	0,061 3
Wall heating	8	0,032 4
Wall cooling	8	0,032 4
Ceiling heating	6,5	0,061 3
Ceiling cooling	10,8	0,000 0

NOTE Explanations concerning the intension and the specification of the heat exchange coefficients of Table A.12

The calculation method of A.2 takes into account the heat transfer on the heating surface in accordance with the Basic Characteristic Curve (see Clause 6, Figure 1). This curve implicates a heat exchange coefficient depending on the temperature difference between the surface and the Standard Indoor Temperature [2].

The characteristic curves determined according to this annex present the heat flux as a function of the difference between the heating/cooling medium temperature and the indoor temperature. This means for the user of the annex, not to do any calculations by directly using values of heat exchange coefficients. Consequently, this annex does not include values for such an application or special details or equations concerning heat exchange coefficients on heating or cooling surfaces.

Thus, the values α in Table A.12 are not intended to calculate the heat flux directly. In fact, they are provided exclusively for the conversion of characteristic curves in accordance with Equation (A.32). Such a conversion shall be performed considering the temperature conditions of the respective value of the heat flux or close to these conditions. This means that, in this annex, the value α of an application has to be specified according to the respective range of temperature.

Reference [4] deals with the heat transfer between heating or cooling surfaces and the room. This publication gives special attention to the case if the operative indoor temperature [3] is the reference value of the room temperature. The "sensed" indoor temperature [2] has a homogeneous definition and is used for reference in this part of ISO 11855 (denomination: Standard Indoor Temperature). The values α of Table A.12 are specified in best compliance with the respective temperature ranges and the conclusions drawn in Reference [4].

Table A.13 — Values for $q_{G,\max}$ depending on $\theta_{F,\max}$ and θ_i

$\theta_{F,\max}$	θ_i	$q_{G,\max}$	
(°C)	(°C)	(W/m^2)	
29	20	100	occupied area
33	24	100	bathroom and similar
35	20	175	peripheral area

Annex B
(normative)

General resistance method

B.1 General equations

This annex outlines a basic calculation method using “linear” thermal resistances. In this way the important parameters for the heat transfer are highlighted. In addition, a clear distinction is made between the heat transfer in the structure and the heat transfer between surface and space. However, some of the equivalent resistances may be determined by finite element or finite difference methods.

The resistance network is shown in Figure B.1 and B.2.

The influences of the pipe type (diameter, wall thickness, material), pipe spacing, water flow rate and the resistance of the conductive layer are included in the virtual resistance R_t:

$$R_\mathrm{t} = R_\mathrm{z} + R_\mathrm{w} + R_\mathrm{r} + R_\mathrm{x} \tag{B.1}$$

where

R_t is the resistance between the supply temperature θ_v and the average temperature of the conductive layer $\overline{\theta}_c$;

R_z is the Fiktive resistance between the supply temperature θ_v and the average temperature of the heating medium;

R_w is the resistance between the fluid and the pipe wall ($1/h_\mathrm{w}$);

R_r is the resistance of the pipe wall;

R_x is the resistance between the pipe outside wall temperature and the average temperature of the conductive layer.

For steady state conditions the resistance R_t is determined by:

$$R_\mathrm{t} = \frac{1}{\dot{m}_\mathrm{H,sp} \cdot c \cdot \left[1 - \exp\left(-\dfrac{1}{\left(R_\mathrm{w} + R_\mathrm{r} + R_\mathrm{x} + \dfrac{1}{U_1 + U_2}\right) \cdot \dot{m}_\mathrm{H,sp} \cdot c}\right)\right]} - \frac{1}{U_1 + U_2} \tag{B.2}$$

where

$\dot{m}_\mathrm{H,sp}$ is the specific design heating or cooling fluid mass flow (related to the pipe covered area) in kg/s;

c is the specific heat capacity of the heating or cooling fluid;

U_i is the heat transfer coefficient between the conductive layer and the space side $i = 1$ or $i = 2$ (including the heat transfer coefficient t given in Clause 6).

The steady state heat flows into the adjacent spaces are determined by the following (see Figure B.1):

$$\dot{q}_1 = \frac{1}{R_1 R_2 + R_1 R_t + R_2 R_t}\left[R_t(\theta_2 - \theta_1) + R_2(\theta_v - \theta_1)\right] \tag{B.3}$$

$$\dot{q}_2 = \frac{1}{R_1 R_2 + R_1 R_t + R_2 R_t}\left[R_t(\theta_1 - \theta_2) + R_1(\theta_v - \theta_2)\right] \tag{B.4}$$

where

θ_v is the supply temperature of the heating or cooling medium;

$\overline{\theta}_c$ is the mean temperature of the conductive layer;

$\overline{\theta}_m$ is the mean heating or cooling medium temperature.

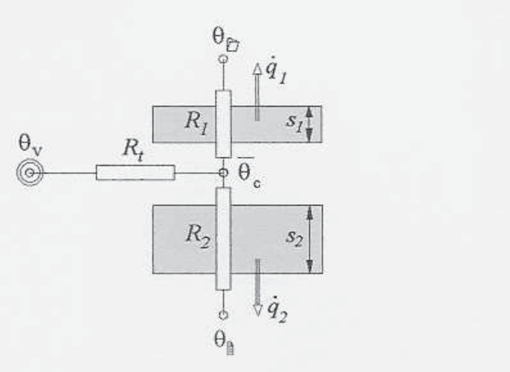

Figure B.1 — Resistance network

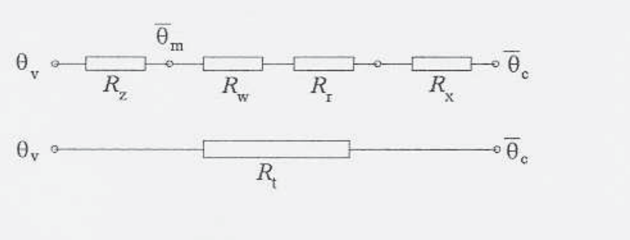

Figure B.2 — Overall resistance network

B.2 Calculation of R_t for pipes embedded in massive concrete (steady state conditions)

Dimensions and other relevant parameters for this construction are given in Figure B.3.

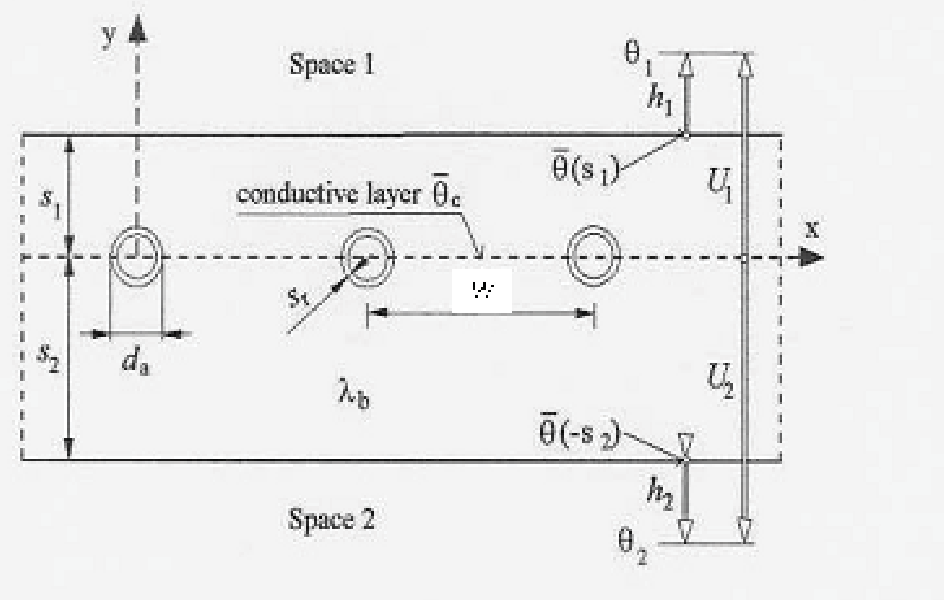

Figure B.3 — Pipes embedded in massive concrete slab

$q = K_H \cdot \Delta\theta_H$

Where K_H for type E and type F is:

$$K_H = \frac{1}{(R_w + R_r + R_x + R_i)}$$

By turbulent flow of the medium inside the pipe (R_e > 2300), R is calculated according to:

$$R_w = \frac{W^{0,13}}{8{,}0 \cdot \pi} \left(\frac{d_a - 2 \cdot s_r}{\dot{m}_{H,sp} \cdot l} \right)^{0,87} \tag{B.5}$$

The resistance of the pipe wall R is defined through:

$$R_r = \frac{W \cdot \ln\left(\frac{d_a}{d_a - 2 \cdot s_r} \right)}{2 \cdot \pi \cdot \lambda_r} \tag{B.6}$$

and the resistance R between the pipe outside wall and the conductive layer can be described approximately according to:

$$R_x \approx \frac{W \cdot \ln\left(\frac{W}{\pi \cdot d_a} \right)}{2 \cdot \pi \cdot \lambda_b} \tag{B.7}$$

Limitation of method

The approximation of R is valid for

$s_i / W > 0{,}3$ and $d_a / W < 0{,}2$

For other configurations, R_x can be determined by finite element or finite difference calculations.

The heat transfer coefficient U_i is calculated according to:

$$U_i = 1/\left(\frac{1}{h_i} + \frac{s_i}{\lambda_b}\right) \tag{B.8}$$

The corresponding resistances are:

$$R_i = \frac{1}{U_i} \tag{B.9}$$

where

$\dot{m}_{H,sp}$	is the specific design heating or cooling fluid mass flow (related to the pipe covered area);
c	is the specific heat capacity of the heating or cooling fluid;
W	is the pipe spacing;
d_a	is the outside diameter of the pipe;
s_r	is the pipe wall thickness;
l	is the length of the pipe circuit;
λ_b	is the conductivity of the construction (concrete);
λ_r	is the conductivity of the pipe wall.

B.3 Calculation of R_t for capillary pipes embedded in a layer at the inner surface (steady state conditions)

Dimensions and other relevant parameters for this construction are given in Figure B.4.

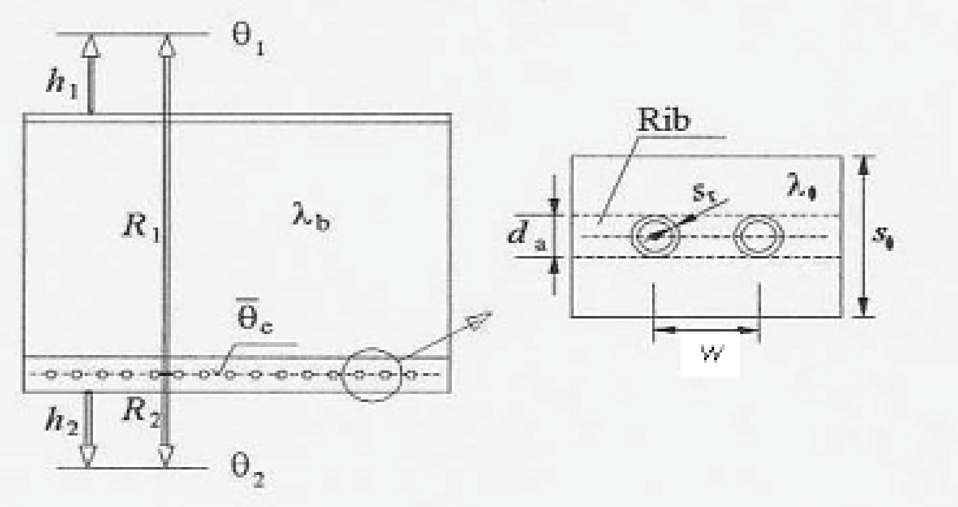

Figure B.4 — Pipes embedded in layer at inside surface

For laminar flow of the medium inside the pipe (Re < 2 300), R is calculated according to:

$$R_{\mathrm{w}} = \frac{W}{\pi \cdot \lambda_{\mathrm{w}}} \cdot \left(49{,}03 + 4{,}17 \cdot \frac{4}{\pi} \cdot \frac{\dot{m}_{\mathrm{H,sp}} \cdot c \cdot W}{\lambda_{\mathrm{w}}} \right)^{-\frac{1}{3}} \tag{B.10}$$

Resistance of the pipe wall R_{r} is defined through:

$$R_{\mathrm{r}} = \frac{W \cdot \ln\left(\dfrac{d_{\mathrm{a}}}{d_{\mathrm{a}} - 2 \cdot s_{\mathrm{r}}} \right)}{2 \cdot \pi \cdot \lambda_{\mathrm{r}}} \tag{B.11}$$

and the resistance R_{x} between the pipe outside wall and the conductive layer can be described according to:

$$R_{\mathrm{x}} = \frac{W \cdot \dfrac{1}{3} \left(\dfrac{W}{\pi \cdot d_{\mathrm{a}}} \right)}{2 \cdot \pi \cdot \lambda_{\mathrm{l}}} \tag{B.12}$$

The heat transfer coefficients U_1 and U_2 are calculated according to:

$$U_1 = 1 / \left(\frac{1}{h_1} + \frac{s_1}{\lambda_{\mathrm{b}}} + \frac{s_{\mathrm{l}}/2}{\lambda_{\mathrm{l}}} \right) \tag{B.13}$$

and

$$U_2 = 1 / \left(\frac{1}{h_2} + \frac{s_{\mathrm{l}}/2}{\lambda_{\mathrm{l}}} \right) \tag{B.14}$$

The corresponding resistances are:

$$R_{\mathrm{i}} = \frac{1}{U_{\mathrm{i}}} \tag{B.15}$$

The resistance network is shown in Figure B.5.

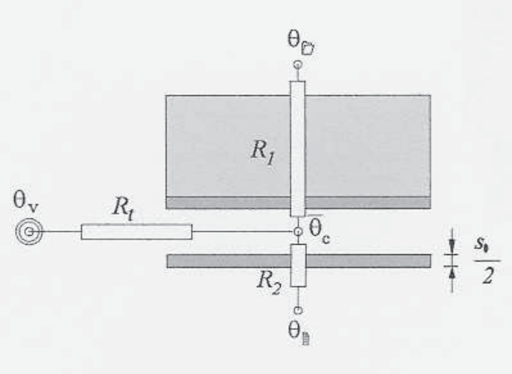

Figure B.5 — Resistance network

where

$\dot{m}_{\mathrm{H,sp}}$ is the specific design heating or cooling fluid mass flow (related to the pipe covered area) (kg/s);

C	is the specific heat capacity of the heating or cooling fluid;
W	is the pipe spacing;
d_a	is the outside diameter of the pipe;
s_r	is the pipe wall thickness;
λ_l	is the conductivity of the rib layer material;
λ_r	is the conductivity of the pipe wall;
λ_w	is the conductivity of the heating or cooling fluid
λ_b	is the conductivity of the construction material (concrete).

Annex C
(normative)

Pipes embedded in wooden construction

C.1 Field of application

The calculation method in this annex is intended for use primarily with water based surface heating and cooling systems in conventional wooden joist floor structures and other similar lightweight structures. One characteristic of these structures is that they are built up from layers of materials having relatively low thermal conductivity, with the heat being distributed horizontally (or vertically, in walls) mainly by thermal conducting metal sheets or fins/fins with high thermal conductivity. The corresponding characteristics of other arrangements (i.e. not using heat distribution plates) can be determined by laboratory tests. This calculation method is not applicable to embedded heating and cooling systems in concrete floors, for which the method in Annex A shall be used instead.

C.2 Determination of heat exchange by calculation

C.2.1 Applicability

The calculation model employed in this part of ISO 11855 assumes that transverse conduction of heat through the floor/wall/ceiling structure depends primarily on the presence and effect of heat conducting plates. This means that the thermal conductivity of the heat conducting plates shall be considerably greater than that of the surrounding layers. See the requirements in C.2.4.4.1.

If other design arrangements are used, the characteristics shall be determined by testing as described in Annex E.

C.2.2 The calculation model — General

The heat conducting layer plays a central part in the calculation model used for heated floor structures, as shown in Figure C.1.

Heat transport through the floor structure depends on a large number of constituent components, as shown in Figure C.1, but it can be simplified to the three thermal resistances shown diagrammatically in Figure C.1:

- the thermal resistance above the heat conducting layer, from the heat conducting plate to the conditioned room, $R_{i;}$
- the thermal resistance beneath the heat conducting layer, from the heat conducting plate to a neighbour room or to the outdoor air, $R_{e;}$
- the thermal resistance from the heating medium to the heat conducting layer, R_{HC}.

These thermal resistances can be determined by calculation or by testing. The nodes shown in Figure C.1 represent the indoor temperature, the temperature in a neighbour room, ground or outside, the temperature of the pipe and the average temperature in the heat conducting layer.

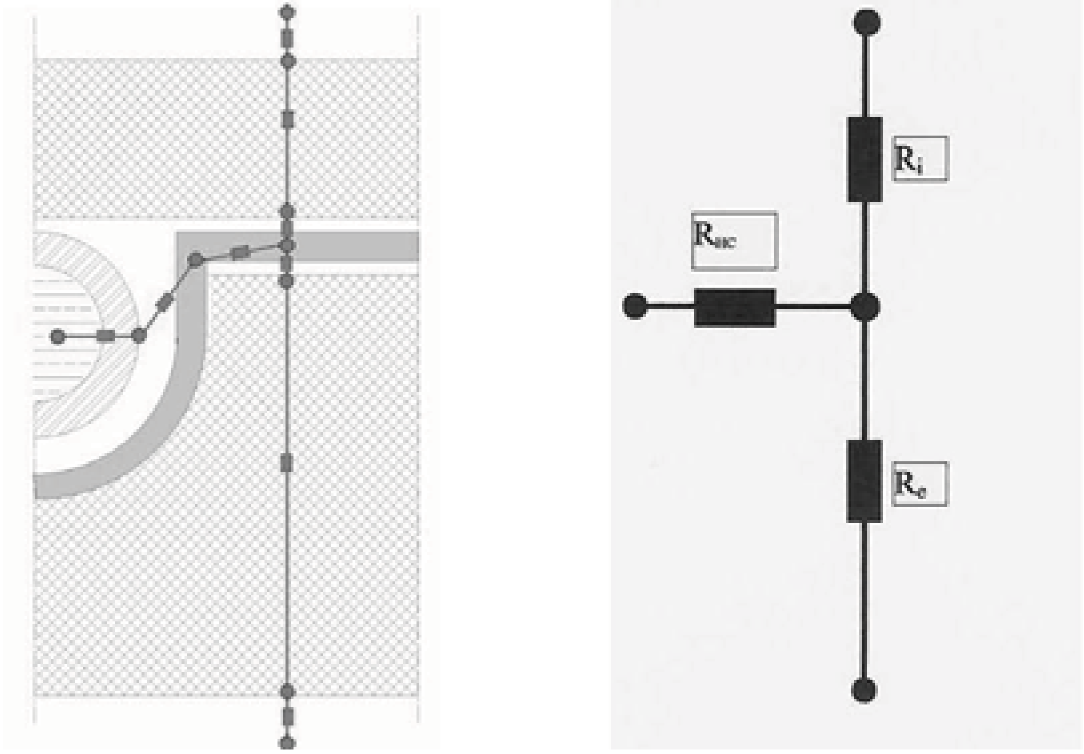

Figure C.1 — Heat transfer through the floor structure expressed as a network of thermal resistance

C.2.3 Calculation procedure for determination of equivalent heat transmission coefficient

C.2.3.1 General

This calculation procedure comprises determination of:

- maximum heat flow density to the room (see C.2.3.2);
- mean temperature of the heating or cooling medium (see C.2.3.3);
- equivalent heat transmission coefficient (see C.2.3.4).

See C.2.4 for the calculation procedure for components and element characteristics.

C.2.3.2 Maximum heat flow density to the room

C.2.3.2.1 Maximum or minimum permissible surface temperature

Recommended maximum or minimum surface temperatures ($\theta_{x.max}$.$\theta_{s.min}$) are given in Annex G.

C.2.3.2.2 Maximum or minimum permissible mean floor surface temperature

The maximum permissible mean floor surface temperature is given by:

$$\theta_{\mathrm{s,m}}^{\mathrm{max}} - \theta_{\mathrm{i}} = k_{\mathrm{CL}} \cdot (\theta_{\mathrm{s,max,min}} - \theta_{\mathrm{i}}) \ \mathrm{°C} \tag{C.1}$$

where k_{CL} is the equivalent coefficient of thermal conductivity for the heat conducting layer, in accordance with C.2.4.4.2.

C.2.3.2.3 Limitation of maximum heat flow density to the room

The maximum heat flow density is given in Clause 6.

C.2.3.3 Maximum/minimum permissible mean temperature of the heating or cooling medium

$$\theta_{\mathrm{H}}^{\mathrm{max,min}} = \theta_{\mathrm{i}} + q_{\mathrm{i}}^{\mathrm{max,min}} \cdot \left(R_{\mathrm{i}} + \frac{1}{\eta} \cdot R_{\mathrm{HC}} \right) \ \mathrm{°C} \tag{C.2}$$

The mean temperature of the heating medium shall never exceed this temperature.

C.2.3.4 Equivalent heat transmission coefficient

Somewhat simplified, the heat output to the room can be described by the expression:

$$q_{\mathrm{i}} = K_{\mathrm{Hi}} \cdot \Delta\theta_{\mathrm{H}} \ \mathrm{W/m^2} \tag{C.3}$$

where

K_{H} is the equivalent coefficient of thermal conductivity;

$\Delta\theta_{\mathrm{H}} = \theta_{\mathrm{H}} - \theta_{\mathrm{i}}$ is the differential temperature of the heating or cooling medium.

Calculate the equivalent coefficient of thermal conductivity towards the space from:

$$K_{\mathrm{Hi}} = 1/(R_{\mathrm{HC}} + R_{\mathrm{i}}) \ \mathrm{W/m^2\,°C} \tag{C.4a}$$

and the equivalent coefficient of thermal conductivity towards the back-side from:

$$K_{\mathrm{He}} = 1/(R_{\mathrm{HC}} + R_{\mathrm{e}}) \ \mathrm{W/m^2\,°C} \tag{C.4b}$$

and

$$K_{\mathrm{Hi}} = \frac{q_{\mathrm{i}}^{\mathrm{max,min}}}{\theta_{\mathrm{H}}^{\mathrm{max,min}} - \theta_{\mathrm{i}}} \ \mathrm{W/m^2\,°C} \tag{C.4c}$$

C.2.4 Calculation procedure for components and element characteristics

C.2.4.1 General

This calculation procedure comprises determination of:

- thermal resistance above the heat conducting layer (see C.2.4.2);
- thermal resistance on the back-side of the heat conducting layer (see C.2.4.3);
- thermal resistance between the heat source and the heat conducting layer (see C.2.4.4).

See C.2.3 for the calculation procedure for determination of equivalent heat transmission coefficient.

C.2.4.2 Thermal resistance above the heat conduction layer

C.2.4.2.1 Thermal resistance of material layers

Calculate and add up the thermal resistance of the various layers of material in the upper part of the floor as follows:

$$R_\mathrm{o} = \sum_j \frac{d_\mathrm{j}}{\lambda_\mathrm{j}} \ \mathrm{m^2\,°C/W} \tag{C.5}$$

C.2.4.2.2 Contact resistance

If the heat conducting plates are not in perfect thermal contact with the floor materials, there will be a contact resistance. For a normal design of heat conducting plates, this resistance is given by:

$$R_\mathrm{con,i} = 0{,}15 \ \mathrm{m^2\,°C/W}$$

If the heat conducting plates are carefully shaped and are bonded to the floor materials, then:

$$R_\mathrm{con,i} = 0{,}10 \ \mathrm{m^2\,°C/W}$$

Lower values of thermal contact resistance may be used if indicated by results of testing (EN 1264-2).

C.2.4.2.3 Boundary layer thermal resistance at the floor surface

$$R_\mathrm{si} = \frac{1}{h_\mathrm{i}} \ \mathrm{m^2\,°C/W} \tag{C.6}$$

where

h_i is the heat transfer coefficient, depending on the type of surface (floor, wall, ceiling) and the mode (heating or cooling), as described in Clause 6.

C.2.4.2.4 Total thermal resistance

The total thermal resistance from the heat conducting layer to the room is given by:

$$R_\mathrm{i} = R_\mathrm{o} + R_\mathrm{con,i} + R_\mathrm{si} \ \mathrm{m^2\,°C/W} \tag{C.7}$$

C.2.4.3 Thermal resistance on the back-side of the heat conducting layer

C.2.4.3.1 Thermal resistance to neighbour conditioned room

Calculate and add up the thermal resistance of the various layers of material in the back-side part of the construction as follows

$$R_\mathrm{u} = \sum_k \frac{d_\mathrm{k}}{\lambda_\mathrm{k}} \ \mathrm{m^2\,°C/W} \tag{C.8}$$

This expression ignores the thermal contact resistance between the heat conducting layer and the sub-floor. The total thermal resistance from the heat conducting layer at the back-side of the floor is given by:

$$R_\mathrm{e,0} = R_\mathrm{u} + R_\mathrm{se} \ \mathrm{m^2\,°C/W} \tag{C.9}$$

where R_se is the boundary layer resistance at the back-side towards a neighbour space. This depends on the type of surface (floor, wall, ceiling) and the type of system (heating or cooling).

C.2.4.3.2 Ground floor joist structure

Calculate the thermal resistance for the outward side of the floor from the coefficient of thermal transmittance or the U-value, and subtract the thermal resistance for the inward side of the floor:

$$R_\mathrm{e,0} = \frac{1}{U} - R_\mathrm{i} \ \mathrm{m^2\,°C/W} \tag{C.10}$$

NOTE The U-value of floor structures resting on the ground can be calculated from ISO 13370.

C.2.4.3.3 Correction of R_e

As the heating or cooling pipe and its fastening to the heat conducting plates is generally placed in a channel in the underlying thermal insulation, the effect is a reduction of the back-side thermal resistance:

$$R_\mathrm{e} \approx R_\mathrm{e,0} - 2 \cdot \Delta R_\mathrm{e} \ \mathrm{m^2\,°C/W} \tag{C.11}$$

Where the coefficient 2 is a correction caused by two-dimensional effects and:

$$\Delta R_\mathrm{e} = \frac{d}{\lambda_\mathrm{ins}} \cdot \frac{b}{W} \ \mathrm{m^2\,°C/W} \tag{C.12}$$

where

d is the depth of the channel;

b is the width of the channel;

W is the pipe spacing.

Other components of the structure, such as the joists, also reduce the thermal resistance of the sub-construction. This is allowed for by calculating the thermal conductivity of the lower layer as a single mean value for the various materials, based on their proportions of the respective layer.

C.2.4.4 Thermal resistance between the heat source and the heat conducting layer

C.2.4.4.1 Mean temperature of the heat conducting plates

The purpose of the heat conducting plates is partly to distribute the heat from the coils over the entire cross-section of the floor, thus producing a more even temperature distribution, and partly to improve the thermal contact with the inward part of the floor. The heat conducting plate roughly consists of two fins that are separated by a midsection where the plate is in thermal contact with the pipe. The heat conducting plates are described by:

L_{WL}	width of the heat conducting plate $\leq T$	m
$s_{\text{WL}} \cdot \lambda_{\text{L}}$	heat conducting performance	W/°C

Limitation of the method:

The following conditions shall be fulfilled:

$\lambda_{\text{WL}} \geq 10 \cdot \lambda_{\text{Surrounding materials}}$	W/m°C
$s_{\text{WL}} \cdot \lambda_{\text{WL}} \geq 0{,}01$	W/°C

Calculate the characteristic length of the fin from:

$$l = \sqrt{\frac{s_{\text{WL}} \cdot \lambda_{\text{WL}}}{\frac{1}{R_{\text{i}}} + \frac{1}{R_{\text{e}}}}} \text{ m} \tag{C.13}$$

where

s_{WL} is the thickness of the fin in [m];

λ_{WL} is the thermal conductivity of the fin [W/m °C];

R_{i} is the internal thermal resistance [W/m^2 °C];

R_{e} is the external thermal resistance [W/m^2 °C].

The mean temperature of the fin is given by:

$$\bar{\theta}_{\text{fin}} = k_{\text{fin}} \cdot \theta_{\text{fin}} \text{ °C} \tag{C.14}$$

$$k_{\text{fin}} = \frac{l}{L_{\text{fin}}} \cdot \tanh\left(\frac{L_{\text{fin}}}{l}\right) \tag{C.15}$$

where

$\bar{\theta}_{\text{fin}}$ is the mean temperature of the fin, °C;

θ_{fin} is the temperature at the fin junction with the pipe, which is the maximum temperature in the fin, °C;

$$L_{\text{fin}} = \frac{L_{\text{WL}} - L_{\text{U}}}{2} = \frac{T - L_{\text{U}} - L_{\text{G}}}{2} \text{ m;}$$

L_{U} is the external diameter of the heating pipe, m;

L_{G} is the gap between the heat conducting plates, m.

The minimum temperature in the fin is given by:

$$\theta_{\text{fin}}^{\text{min}} = k_{\text{fin}}^{\text{min}} \cdot \theta_{\text{fin}} \text{ °C} \tag{C.16}$$

$$k_{\text{fin}}^{\text{min}} = \frac{1}{\cosh\left(\frac{L_{\text{fin}}}{l}\right)} \tag{C.17}$$

C.2.4.4.2 The mean temperature in the heat conducting layer

The mean temperature in the heat conducting layer is given by:

$$\bar{\theta}_{\text{CL}} = k_{\text{CL}} \cdot \theta_{\text{fin}} \text{ °C} \tag{C.18}$$

$$k_{\text{CL}} = \frac{L_{\text{U}} + 2 \cdot L_{\text{fin}} \cdot k_{\text{fin}} + 0{,}01 \cdot L_{\text{G}} \cdot k_{\text{fin}}^{\text{min}}}{L} \tag{C.19}$$

C.2.4.4.3 Fictitious thermal resistance of the heat conducting layer

$$R_{\text{CL}} = \frac{1}{\frac{1}{R_{\text{i}}} + \frac{1}{R_{\text{e}}}} \cdot \left(\frac{1}{k_{\text{CL}}} - 1\right) \text{ m}^2 \text{ °C/W} \tag{C.20}$$

C.2.4.4.4 Pipe coils

The required pipe coil parameters are the external diameter, the internal diameter and the thermal conductivity of the pipe material. In addition, it is necessary to note whether the pipe walls contain any special layers for distributing the heat around the periphery, which affects the proportion of the circumference of the pipe that is in good contact with the conducting plate.

Nominally, the total thermal resistance through the pipe wall is given by:

$$R_{\text{R}}' = \frac{1}{2 \cdot \pi \cdot \lambda_{\text{R}}} \ln\left(\frac{d_{\text{o}}}{d_{\text{i}}}\right) \text{ m°C/W} \tag{C.21}$$

where

d_{o} is the outer pipe diameter, m;

d_{i} is the inner pipe diameter, m;

λ_{R} is the thermal conductivity of the pipe wall, W/m°C.

For PEX-pipes λ = 0,35 W/m °C shall be used. Annex E provides values for different types of pipes.

C.2.4.4.5 Thermal contact resistance between the heat conducting layer and the heating pipe

This part of ISO 11855 considers two types of connections between the heating pipe and the heat conducting plate:

- the centre of the heat conducting plate being bent into a U-profile, partly surrounding the heating pipe;
- the heating pipes laid in channels cut in the underlying thermal insulation and surrounded by filler with a high thermal conductivity which, in turn, is in good contact with the smooth heat conducting plate above the pipes.

For both types of the contact, the resistance is calculated by:

$$R'_{\mathrm{R,con}} = \frac{1}{d_{\mathrm{o}}} \text{ m°C/W} \tag{C.22}$$

where d_{o} is the diameter of the pipe.

NOTE A more accurate value might be determined by two-dimensional computer calculations or by tests.

C.2.4.4.6 Resistance in the U-profile of the heat conducting device

For heat conducting devices where the pipe is inserted in a U-profile, an additional thermal resistance applies. Heat from the pipe is collected along the U-profile and shall be conducted to the plane part of the heat conducting device.

The linear resistance can be calculated by:

$$R'_{\mathrm{u}} = \frac{0{,}008}{d_{\mathrm{a}}} \text{ m°C/W} \tag{C.23}$$

where d_{a} is the diameter of the pipe.

C.2.4.4.7 Total thermal resistance between the heat source and the heat conducting layer

$$R_{\mathrm{HC}} = W \cdot R'_{\mathrm{R}} + W \cdot R'_{\mathrm{R,con}} + \frac{W}{2} \cdot R'_{\mathrm{U}} + R_{\mathrm{CL}} \text{ m}^2 \text{ °C/W} \tag{C.24}$$

where W is the pipe spacing.

Annex D
(normative)

Method for verification of FEM and FDM calculation programmes

D.1 Temperature distribution and heat transfer in a typical floor cooling system

This test example shall be used to verify a steady-state numerical calculation program for FEM or FDM calculations. The structure is shown in Figure D.1 with appropriate material properties and dimensions. Further boundary conditions are:

- room temperature below and above the structure = 26 °C;
- water temperature is the mean = 18 °C;
- turbulent flow (resistance between heating medium and inner pipe is assumed = 0);
- thermal resistance at upper boundary air layer = 1/7 = 0,1 429 m^2K/W;
- thermal resistance at lower boundary air layer = 1/11 = 0,0 909 m^2K/W;
- pipe distance = 150 mm;
- pipe outside diameter = 20 mm;
- pipe wall thickness = 2,3 mm;
- pipes simulated as circles;
- screed below pipe = 10 mm;
- screed above pipe = 30 mm.

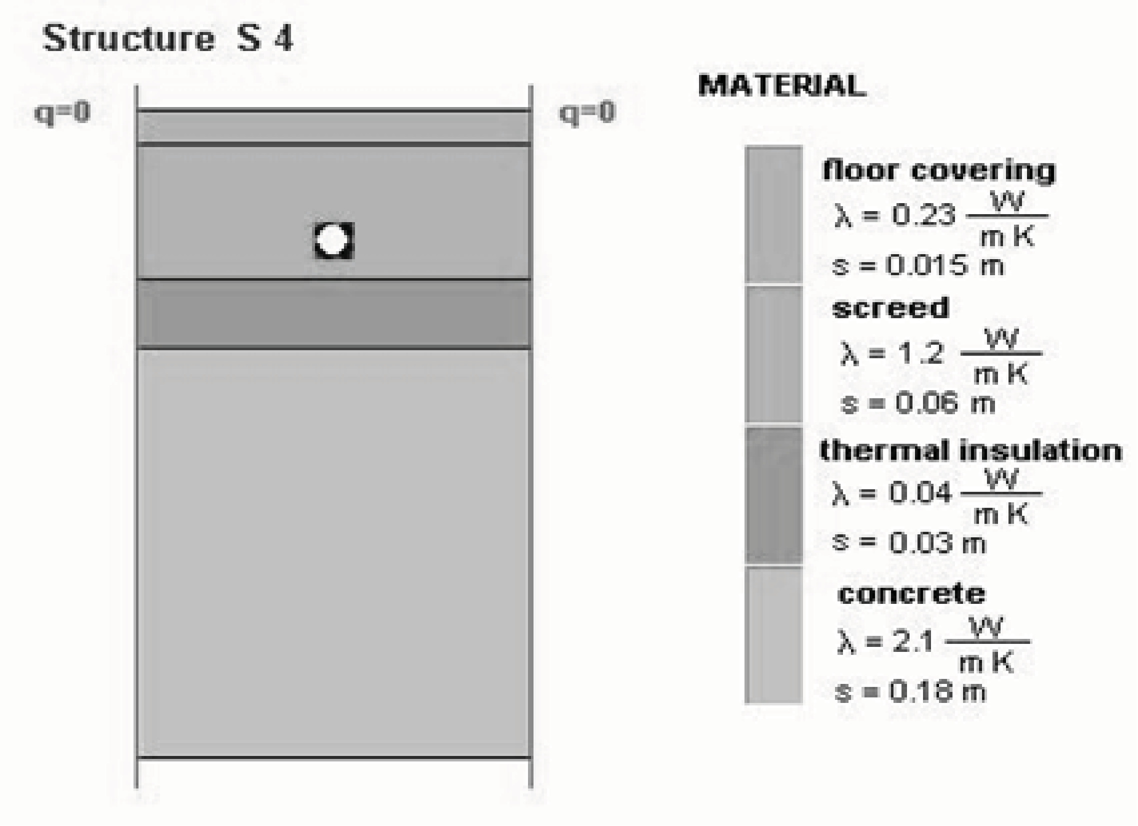

Figure D.1 — System construction and material properties for the test example

Table D.1, Figure D.2 and Figure D.3 show the results for the calculated temperature distribution and the corresponding heat flows. For an acceptable verification, the calculated surface temperature shall be within 0,3K and the calculated heat flow within 3% of the values in Table D.1, Figure D.2 and Figure D.3.

Table D.1 — Results of the calculated temperature distribution

y [m]	T (x = 0 m) [°C]	T (x = 0,0375 m) [°C]	T (x = 0,075 m) [°C]
0,285	22,201	22,064	21,893
0,246	20,086	19,788	19,11
0,205	20,728	20,414	19,765
0,164	24,809	24,806	24,802
0,123	24,944	24,943	24,943
0,082	25,082	25,081	25,081
0,041	25,219	25,219	25,219
0	25,357	25,357	25,357

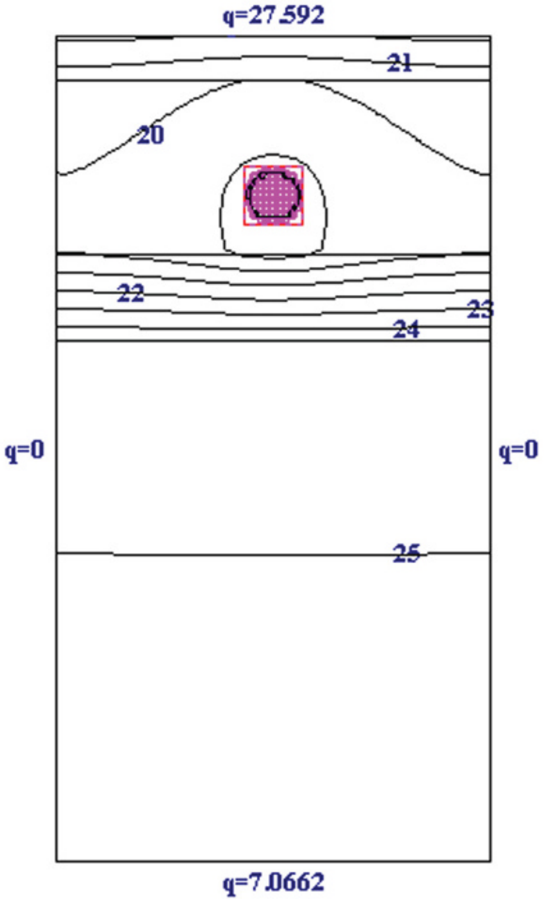

Figure D.2 — Results of temperature distribution

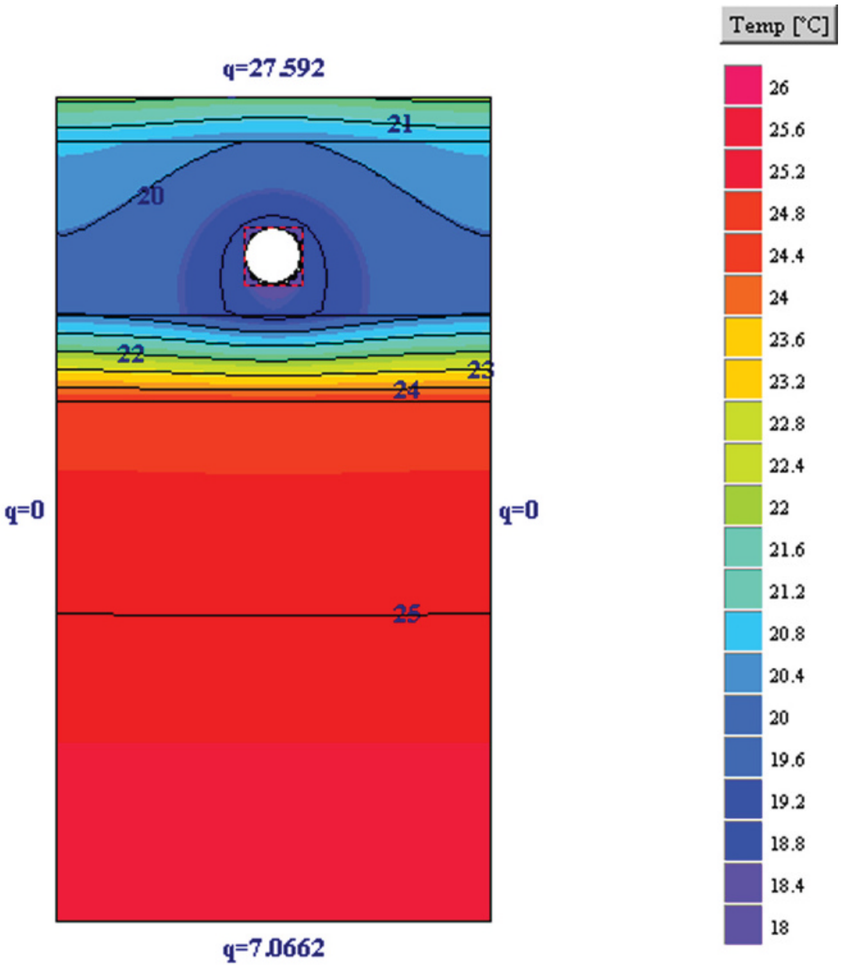

Figure D.3 — Results of temperature distribution

Annex E
(normative)

Values for heat conductivity of materials and air layers

E.1 Solid materials

Values for thermal conductivity of different solid materials are given in Table E.1.

Table E.1 — Thermal conductivity of different materials

Material	Thermal conductivity λ W/(m·K)
PB pipe	0,22
PP pipe	0,22
PE-X pipe (HDX. MDX)	0,35
PE-RT	0,35
Steel pipe	52
Copper pipe	390
Covering PVC with air included	0,15
Covering PVC with no air included	0,2
Heat conducting aluminium device	200
Heat conducting steel device	52
Cement screed	1,2
Anhydrite screed	1,2
Concrete ($\rho \approx 2400 \text{kg/m}^3$)	1,9
Gypsum plaster boards	0,25
Lime plaster	0,7
Industrial floor covering	0,7
Asphalt screed	0,9
Stone wood	0,4
Timber (wood-chip board)	0,15

E.2 Trapped air layers

Values for the equivalent thermal resistance of different types of trapped air layers are given in Table E.2.

Table E.2 — Values for the equivalent thermal resistance of trapped air layers in the floor, wall or ceiling construction. The surfaces of the air layer is assumed to be non-metallic

Position of layer	Thickness of layer in mm									
	5	10	20	40	60	80	100	150	200	
Vertical (walls)	0,116	0,154	0,174	0,181	0,180	0,179	0,177	0,174	0,172	m²K/W
Horizontal (floor, ceiling) Heat flow upwards	0,132	0,164	0,177	0,184	0,188	0,189	0,190	0,191	0,192	m²K/W
Horizontal (floor, ceiling) Heat flow downwards	0,135	0,182	0,220	0,248	0,260	0,266	0,270	0,276	0,278	m²K/W

Bibliography

[1] Konzelmann. M. and G. Zöllner: Thermische Leistungen flächenintegrierter Heiz- und Kühlflächen. Published in HLH 56 (2005). No. 3. pp. 30-34

[2] Konzelmann. M. and G. Zöllner: Wärmetechnische Prüfung von Fußbodenheizungen. Published in HLH 33 (1982). No. 4. pp. 136-142

[3] ISO 7730, *Ergonomics of the thermal environment — Analytical determination and interpretation of thermal comfort using calculation of the PMV and PPD indices and local thermal comfort criteria*

[4] Glück. B.: Wärmeübergangskoeffizienten an thermisch aktiven Bauteiloberflächen und der Übergang zu Basiskennlinien für die Wärmestromdichte. Published in Gesundheits-Ingenieur 128 (2007) No 1. pp. 1-10

[5] EN 563, *Safety of machinery — Temperatures of touchable surfaces — Ergonomics data to establish temperature limit values for hot surfaces*

[6] ISO/TS 13732-2, *Ergonomics of the thermal environment — Methods for the assessment of human responses to contact with surfaces — Part 2: Human contact with surfaces at moderate temperature*

[7] EN 13202, *Ergonomics of the thermal environment — Temperatures of touchable hot surfaces — Guidance for establishing surface temperature limit values in production standards with the aid of EN 563*

[8] ISO 13370, *Thermal performance of buildings — Heat transfer via the ground — Calculation methods*

[9] ISO 7726, *Thermal environments — Instruments and methods for measuring physical quantities*

[10] Konzelmann, M. und Zöllner, G.: Wärmetechnische Prüfung von Fußbodenheizungen. Veröffentlicht in HLH 33 (1982). Nr. 4. S. 136-142

[11] Kast, W.; Klan, H. und Bohle, J.: Wärmeleistung von Fußbodenheizungen. Veröffentlicht in HLH 37 (1986). Nr. 4. S. 175-182

[12] Konzelmann, M. und Zöllner, G.: Auslegung und wärmetechnische Prüfung von Warmwasser-Fußbodenheizungen. Veröffentlicht in SHT 4 (1984). S. 255-259

[13] Kast, W.; Klan, H. und Bohle, J.: Wärmeleistung von Fußbodenheizungen Teil 2. Veröffentlicht in HLH 37 (1986). Nr. 10. S. 497-502

[14] Schmidt, P.: Untersuchung zum Einfluss des Heizsystems und zum Außenflächenzuschlag bei der Wärmebedarfsrechnung; Fortschritt-Berichte der VDI-Zeitschriften. Reihe 6. Nr 80 (1981)

[15] Konzelmann, M.: Wärmeabgabe von Fußbodenheizungen.- Entwicklung einer Prüfmethode; Fortschritt-Berichte VDI. Reihe 19 : Wärmetechnik/Kältetechnik. Nr. 23. VDI-Verlag Düsseldorf (1988)

[16] Bohle, J. and Klan, H.: Design of Panel Heating and Cooling Systems » ASHRAE Transactions .2000

[17] Koschenz, M. und Lehmann, B.: Thermoaktive Bauteilsysteme. tabs . EMPA. Switzerland. 2000

[18] Glück, B. Wärmeübertragung von Raumheizflächen und Rohren. VEB Verlag für Bauwesen. Berlin 1989

[19] P.J. Schneider. Conduction Heat Transfer. 2nd Printing. Addison-Wesley Publishing Co. Inc.. Reading. MA. 1957

[20] Heiselberg, Per: Stratified flow in Rooms with a Cold Vertical Wall. ASHRAE Trans. 1994. V.100. Pt. 1

[21] Nordtest “Design of floor heating systems”. Report nr XXX (in press). 2002

[22] EN 1264-5, *Water based surface embedded heating and cooling systems — Part 5: Heating and cooling surfaces embedded in floors ceilings and walls — Determination of the thermal output*

[23] EN 12828:2002, *Heating systems in buildings — Design for water based heating systems*

[24] EN 12831:2002, *Heating systems in buildings — Method for calculation of the design heat load*

[25] EN 15377-1, *Heating systems in buildings — Design of embedded water based surface heating and cooling systems — Part 1: Determination of the design heating and cooling capacity*

British Standards Institution (BSI)

BSI is the national body responsible for preparing British Standards and other standards-related publications, information and services.

BSI is incorporated by Royal Charter. British Standards and other standardization products are published by BSI Standards Limited.

About us

We bring together business, industry, government, consumers, innovators and others to shape their combined experience and expertise into standards -based solutions.

The knowledge embodied in our standards has been carefully assembled in a dependable format and refined through our open consultation process. Organizations of all sizes and across all sectors choose standards to help them achieve their goals.

Information on standards

We can provide you with the knowledge that your organization needs to succeed. Find out more about British Standards by visiting our website at bsigroup.com/standards or contacting our Customer Services team or Knowledge Centre.

Buying standards

You can buy and download PDF versions of BSI publications, including British and adopted European and international standards, through our website at bsigroup.com/shop, where hard copies can also be purchased.

If you need international and foreign standards from other Standards Development Organizations, hard copies can be ordered from our Customer Services team.

Subscriptions

Our range of subscription services are designed to make using standards easier for you. For further information on our subscription products go to bsigroup.com/subscriptions.

With **British Standards Online (BSOL)** you'll have instant access to over 55,000 British and adopted European and international standards from your desktop. It's available 24/7 and is refreshed daily so you'll always be up to date.

You can keep in touch with standards developments and receive substantial discounts on the purchase price of standards, both in single copy and subscription format, by becoming a **BSI Subscribing Member**.

PLUS is an updating service exclusive to BSI Subscribing Members. You will automatically receive the latest hard copy of your standards when they're revised or replaced.

To find out more about becoming a BSI Subscribing Member and the benefits of membership, please visit bsigroup.com/shop.

With a **Multi-User Network Licence (MUNL)** you are able to host standards publications on your intranet. Licences can cover as few or as many users as you wish. With updates supplied as soon as they're available, you can be sure your documentation is current. For further information, email bsmusales@bsigroup.com.

Revisions

Our British Standards and other publications are updated by amendment or revision.

We continually improve the quality of our products and services to benefit your business. If you find an inaccuracy or ambiguity within a British Standard or other BSI publication please inform the Knowledge Centre.

Copyright

All the data, software and documentation set out in all British Standards and other BSI publications are the property of and copyrighted by BSI, or some person or entity that owns copyright in the information used (such as the international standardization bodies) and has formally licensed such information to BSI for commercial publication and use. Except as permitted under the Copyright, Designs and Patents Act 1988 no extract may be reproduced, stored in a retrieval system or transmitted in any form or by any means – electronic, photocopying, recording or otherwise – without prior written permission from BSI. Details and advice can be obtained from the Copyright & Licensing Department.

Useful Contacts:

Customer Services
Tel: +44 845 086 9001
Email (orders): orders@bsigroup.com
Email (enquiries): cservices@bsigroup.com

Subscriptions
Tel: +44 845 086 9001
Email: subscriptions@bsigroup.com

Knowledge Centre
Tel: +44 20 8996 7004
Email: knowledgecentre@bsigroup.com

Copyright & Licensing
Tel: +44 20 8996 7070
Email: copyright@bsigroup.com

BSI Group Headquarters

389 Chiswick High Road London W4 4AL UK

bsi.

...making excellence a habit.™